Digital midi stack F1395

Service
Service
Service

/01/10/31/40/62/68

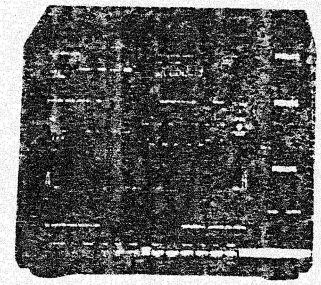

For repair information of the cassette mechanism see Service Manual of Recorders tape deck RX version RX-4

For Record Player see Service Manual AK591

ServiceManual

CONTENTS	Page
Picture of set	2
Connections and controls	3
Specifications	4
Repair chart and self test	5-6
Disassembly drawing	7
Tape deck adjustment and ESD text	8
Chip removal table and safety text	9
Tuner wiring diagram	10-11
Tuner adjustment table	12
Tuner adjustment table (for (-/31)	13
Set wiring diagram	14-15
Tuner chip component layout	16-18
Tuner circuit diagram	19-21
Power circuit/wiring diagram	22-26
RS circuit/wiring diagram	27-31
Front panel circuit/wiring diagram	32-37
E.V. of set	38-40
Electrical stocklist	41

Safety regulations require that the set be restored to its original condition and that parts which are identical with those specified be used.

"Pour votre sécurité, ces documents doivent être utilisés par des spécialistes agréés, seuls habilités à réparer votre appareil en panne"

Subject to modification
4822 725 22476
Printed in The Netherlands
©Copyright reserved

PHILIPS
Published by Service Consumer Electronics

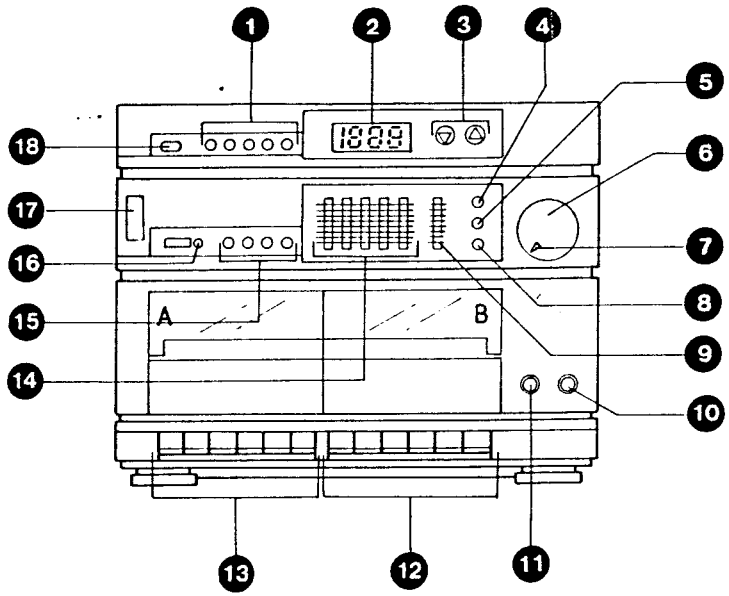

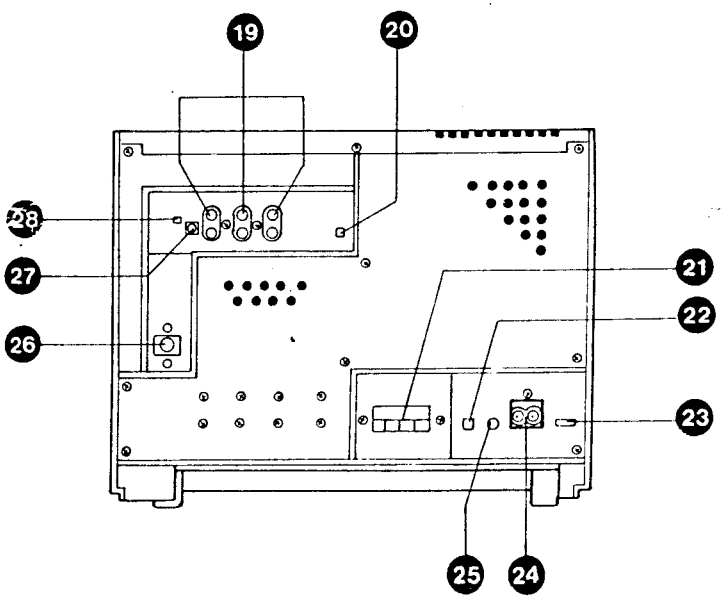

Connections and controls :

1 Tuner Preset buttons:
- Mono/Stereo
- Down
- Up
- Program
- Wave Band

2 LCD Display 6450

3 Down / Up

4 Pre-equalize rec. 1415

5 Bass Boost 1414

6 3458

7 Power indicator 6457

8 Speed selector 1655

9 3425

10 1328

11 1329

12 Tape deck B buttons :

Continuous play 1008

1008

1008

1008

13 Tape deck A buttons :

1007/1009

1007

1007

1007

14 Graphic equalizer 3417,3419 3421,3423 3425

15 Function switch 1655

16 Counter reset button

17 Power ON/OFF 1316

18 Remote control 6456

19 Phono 1651

CD 1651

Aux/TV 1651

20 RIF switch 1710

(Service solution)

21 R,L 1317

22 Phono supply 1319

23 Voltage selector 1320(-/31 only)

24 1311

25 RC5 output 1325

26 FM Aerial 1111

27 Phono Gnd 1652

28 Grid selector 1112(-/31 only)

SPECIFICATION

		TYPICAL VALUE	NOMINAL VALUE
GENERAL			
Mains voltage		: 120V-220V-240V 110V/120V-220V/240V For -/31 only	
Voltage selection		: Serviceable (set at 220V/240V) Switchable (set at 220V) For -/31 only	
Mains frequency		: 50 - 60Hz	
Power consumption		: 110W max.	
TUNER : FM SECTION			
Tuning range		: 87.5MHz - 108MHz	
IF Frequency		: 10.7MHz	
Aerial inputs		: 75ohm coaxial	
Sensitivity		: 2uV 26dB S/N	: .4uV 26dB S/N
Selectivity		: 42dB at 600KHz bandwidth	: ›35dB at 600KHz bandwidth
IF Rejection		: 70dB	: ›60dB
Image rejection		: 40dB	: ›30dB
TUNER : AM SECTION			
Tuning range	SW	: 3.82MHz - 12.1MHz	
	MW	: 522KHz - 1611KHz 530KHz - 1700KHz (For -/31 only)	
	LW	: 148KHz - 284KHz	
IF Frequency		: 450KHz	
Sensitivity	SW	: 200uV 26dB S/N	: ‹400uV 26dB S/N
	MW	: 1.3mV/M 26dB S/N	: ‹1.7mV/M 26dB S/N
	LW	: 3mV/M 26dB S/N	: ‹4mV/M 26dB S/N
Selectivity		: 32dB at 18KHz bandwidth	: ›28dB at 18kHz bandwidth
IF Rejection	SW	: 60dB	: ›40dB
	MW	: 55dB	: ›40dB
	LW	: 60dB	: ›40dB
Image rejection	SW	: 10dB	: ›6dB
	MW	: 35dB	: ›30dB
	LW	: 38dB	: ›34dB
AMPLIFIER			
Output power (D = 10%)		: 2 x 20W +/- 1dB,	
Speaker impedance		: 8ohm	
Frequency response (within +/- 3dB)		: 40Hz to 16,000Hz	
Equalizer control		: -7dB to +7dB	
Dynamic Bass boost		: +7.5dB at 63Hz	
Input sensitivity	Aux/TV	: 300mV	: 380mV
	Mic	: 3.5mV	: 5mV
	Phono	: 4.5mV	: 6.5mV
CASSETTE RECORDER			
Number of tracks		: 2 x 2 (stereo)	
Tape speed		: 4.76 cm/sec +/- 2% : 2 x 4.76 cm/sec on H.S. dubbing	
Wow and flutter		: ‹0.4%	
Fast-wind time C60		: ‹130 sec.	
Bias Frequency		: 78KHz	
RIF-shift control		: 8kHz	
Recording playback frequency response (within 8dB)		: 80Hz to 10,000Hz 80Hz to 8,000Hz (H.S. dubbing)	
Signal to Noise ratio		: ›51dB ›48dB (Dubbing)	

FIG. 1A

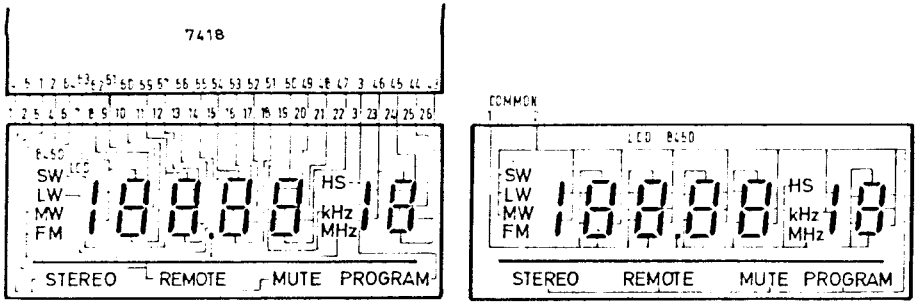

FIG. 1B

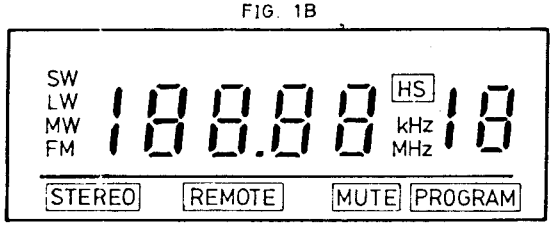

FIG. 2

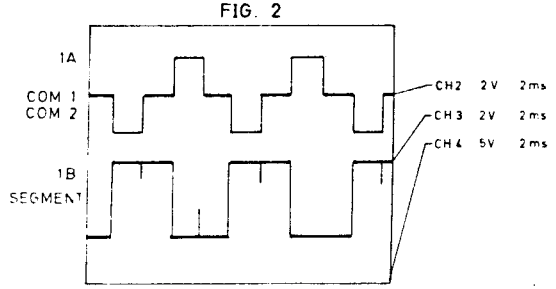

FIG. 3

I/O	ACTIVE	PASSIVE
I/P	'1'	'0'
O/P	'1'	'1'

FIG. 4

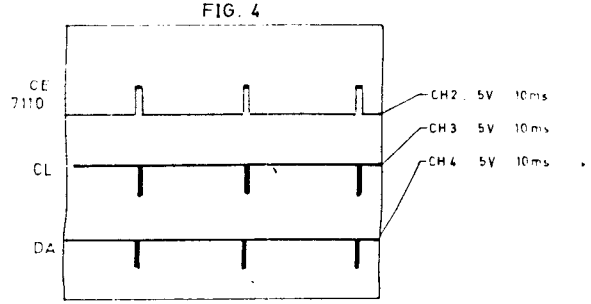

FIG. 5

WAVE	7110		7418
	PIN 9	PIN 10	PIN 22
FM	'1'	-	'1'
MW	'0'	'1'	'1'
LW	'0'	'0'	'1'
SW	'0'	'1'	'0'

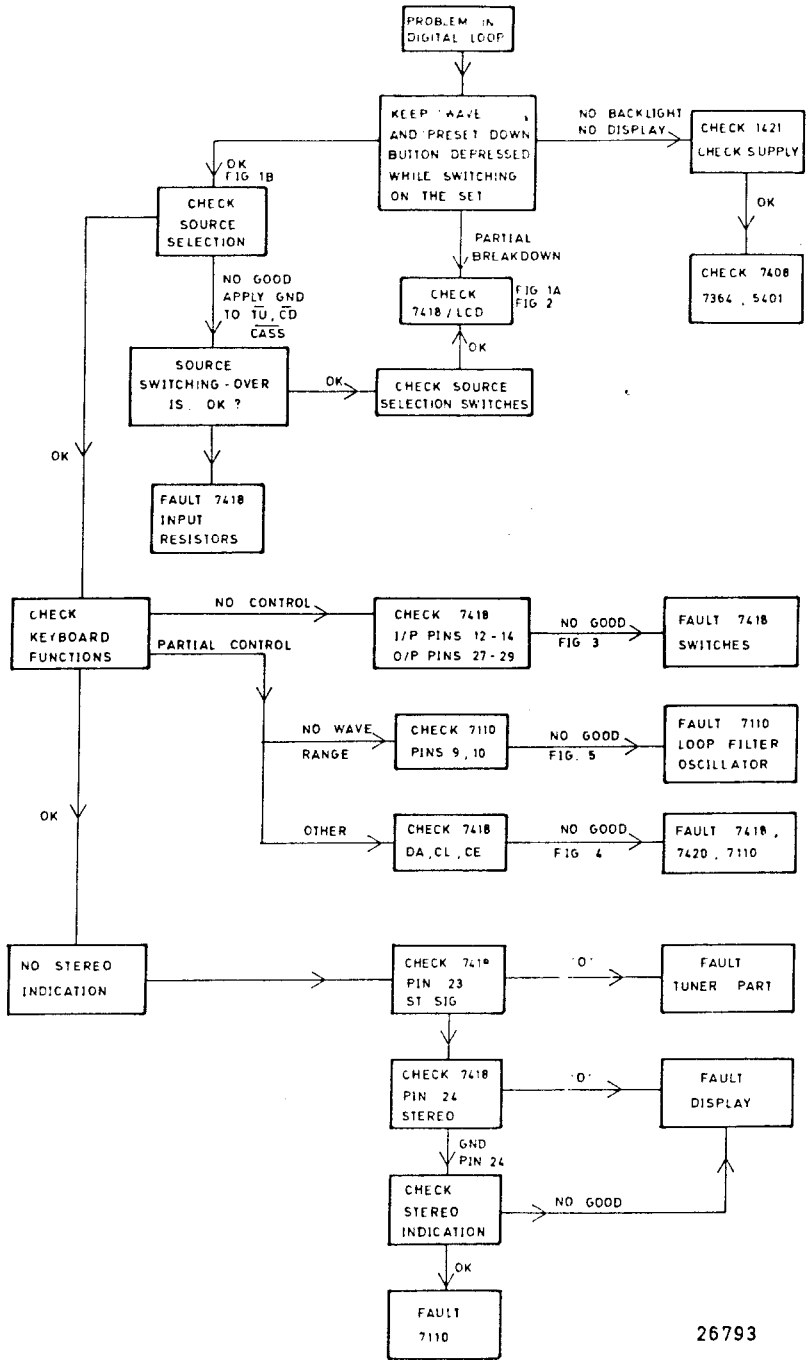

26793

Disassembly sequence

A - 5 screws

B - 13 screws

C - 4 screws

D - 2 screws

E - 3 screws

F - 4 screws

G - 1 screw

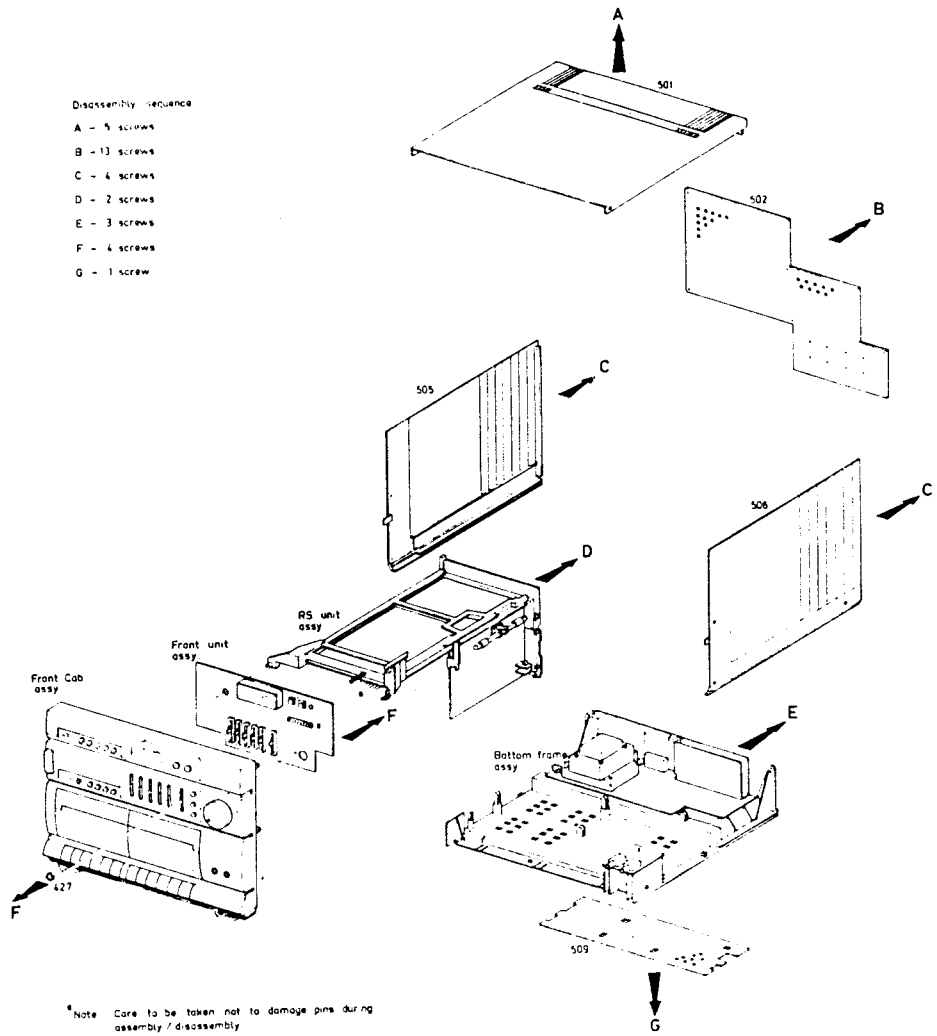

*Note Care to be taken not to damage pins during assembly / disassembly

26802

(GB) **WARNING**

All ICs and many other semi-conductors are susceptible to electrostatic discharges (ESD). Careless handling during repair can reduce life drastically.
When repairing, make sure that you are connected with the same potential as the mass of the set via a wrist wrap with resistance. Keep components and tools also at this potential.

ESD

(F) **ATTENTION**

Tous les IC et beaucoup d'autres semi-conducteurs sont sensibles aux décharges statiques (ESD).
Leur longevite pourrait être considerablement ecourtee par le fait qu'aucune précaution n'est prise a leur manipulation.
Lors de reparations, s'assurer de bien être relié au même potentiel que la masse de l'appareil et enfiler le bracelet serti d'une resistance de securite.
Veiller à ce que les composants ainsi que les outils que l'on utilise soient également a ce potentiel.

(D) **WARNUNG**

Alle ICs und viele andere Halbleiter sind empfindlich gegenuber elektrostatischen Entladungen (ESD).
Unsorgfältige Behandlung im Reparaturfall kan die Lebensdauer drastisch reduzieren.
Veranlassen Sie, dass Sie im Reparaturfall uber ein Pulsarmband mit Widerstand verbunden sind mit dem gleichen Potential wie die Masse des Gerates.
Bauteile und Hilfsmittel auch auf dieses gleiche Potential halten.

(NL) **WAARSCHUWING**

Alle IC's en vele andere halfgeleiders zijn gevoelig voor electrostatische ontladingen (ESD).
Onzorgvuldig behandelen tijdens reparatie kan de levensduur drastisch doen verminderen.
Zorg ervoor dat u tijdens reparatie via een polsband met weerstand verbonden bent met hetzelfde potentiaal als de massa van het apparaat.
Houd componenten en hulpmiddelen ook op ditzelfde potentiaal.

(I) **AVVERTIMENTO**

Tutti IC e parecchi semi-conduttori sono sensibili alle scariche statiche (ESD).
La loro longevità potrebbe essere fortemente ridatta in caso di non osservazione della piu grande cauzione alla loro manipolazione.
Durante le riparazioni occorre quindi essere collegato allo stesso potenziale che quello della massa dell'apparecchio tramite un braccialetto a resistenza.
Assicurarsi che i componenti e anche gli utensili con quali si lavora siano anche a questo potenziale.

CASSETTE DECK

Adjustment	Cassette	Recorder position			Measure on	Read on	Adjust with	Adjust to
		SK...	Deck A	Deck B				
Azimuth	10KHz SBC420*	Tape	Play	—	1329	mV-meter	Left hand screw Play head	max. output L = R
		Tape	—	Play	1329	mV-meter	Left hand screw R/P head	
Motor speed (Normal)	3150Hz SBC420*	Tape	Play	—	1329	Wow and Flutter meter	preset in motor	**a
		Tape	—	Play	1329	Wow and Flutter meter	—	**a
Motor speed (High)	3150Hz SBC420*	High speed Dubbing	Record	Play	1329	Frequency counter	—	6.0 ± 0.3 KHz

* SBC 420 : 4822 397 30071

**a The maximum permissible speed deviation is 2%. Moreover, the wow and flutter value can be read. This value should not exceed 0.35%.

HANDLING CHIP COMPONENTS

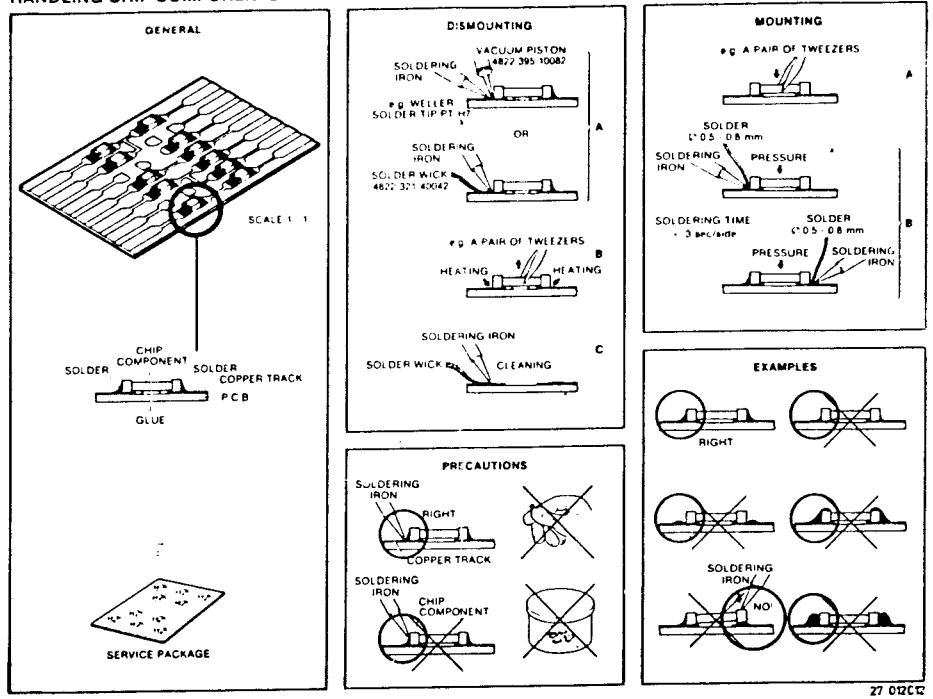

27 012C12

(GB)
Safety regulations require that the set be restored to its original condition and that parts which are identical with those specified, be used.

(F)
Les normes de sécurité exigent que l'appareil soit remis à l'état d'origine et que soient utilisées les pièces de rechange identiques à celles spécifiées.

(NL)
Veiligheidsbepalingen vereisen, dat het apparaat bij reparatie in zijn oorspronkelijke toestand wordt teruggebracht en dat onderdelen, identiek aan de gespecificeerde, worden toegepast.

(D)
Bei jeder Reparatur sind die geltenden Sicherheitsvorschriften zu beachten. Der Originalzustand des Geräts darf nicht verändert werden; für Reparaturen sind Original-Ersatzteile zu verwenden.

(I)
Le norme di sicurezza esigono che l'apparecchio venga rimesso nelle condizioni originali e che siano utilizzati i pezzi di ricambio identici a quelli specificati.

0386	B 3	3134	B 5	9003	D 7
0389	E 6	3135	C 8	9004	E 7
0390	E 6	3139	B 7	9005	B 8
0391	E 3	3141	E 7	9006	D 7
0392	C 3	3142	E 7	9008	C 7
0393	A 7	3143	D 7	9009	E 6
0394	A 7	3145	E 6	9010	C 7
0395	A 7	3147	B 7	9011	E 6
0396	A 7	3148	D 8	9012	B 6
2100	B 3	3149	D 8	9013	E 6
2101	B 3	3150	D 8	9014	E 6
2103	D 3	3151	D 8	9015	C 6
2109	B 4	3153	E 7	9016	D 6
2111	B 5	3155	D 7	9017	C 6
2119	C 5	3206	D 5	9018	B 6
2121	C 4	5101	C 3	9019	B 5
2122	C 4	5102	B 3	9020	E 5
2123	D 4	5103	B 4	9021	B 5
2130	D 5	5104	B 4	9022	D 5
2131	D 4	5104	C 5	9023	D 5
2134	D 4	5105	D 3	9024	D 5
2135	D 4	5106	B 7	9025	D 4
2137	C 5	5107	D 5	9026	B 4
2139	B 7	5107	B 6	9027	D 3
2141	B 6	5107	C 6	9028	E 3
2144	D 4	5108	C 6	9029	C 4
2146	B 5	5109	C 6	9030	E 3
2150	E 4	5110	E 5	9033	C 3
2151	E 4	5111	B 6		
2152	D 5	5112	C 7		
2153	D 4	5113	C 5		
2154	B 3	5201	D 3		
2155	B 7	5202	E 4		
2158	C 7	5203	D 5		
2161	D 6	5204	E 3		
2163	D 6	5205	B 7		
2164	C 7	5210	D 3		
2165	C 6	6103	B 5		
2167	E 7	6104	E 4		
2168	D 6	6105	D 4		
2170	D 7	6106	C 4		
2172	D 6	6107	C 6		
2173	D 7	6108	E 8		
2176	E 6	6109	E 8		
2177	E 6	6201	E 3		
2182	B 7	6202	E 4		
2190	C 3	6205	E 7		
2205	E 4	6206	E 8		
2212	E 4	7101	C 4		
3105	C 4	7102	C 4		
3106	B 4	7103	B 5		
3107	B 4	7104	B 6		
3108	C 4	7105	C 6		
3109	B 4	7106	D 6		
3110	B 4	7107	D 5		
3111	B 5	7108	E 5		
3114	C 4	7109	E 5		
3116	D 4	7110	C 7		
3120	C 7	7112	D 4		
3125	D 6	7201	E 3		
3126	E 5	7202	D 3		
3128	D 4	7203	E 4		
3131	D 7	9001	E 7		
3132	B 6	9002	D 7		

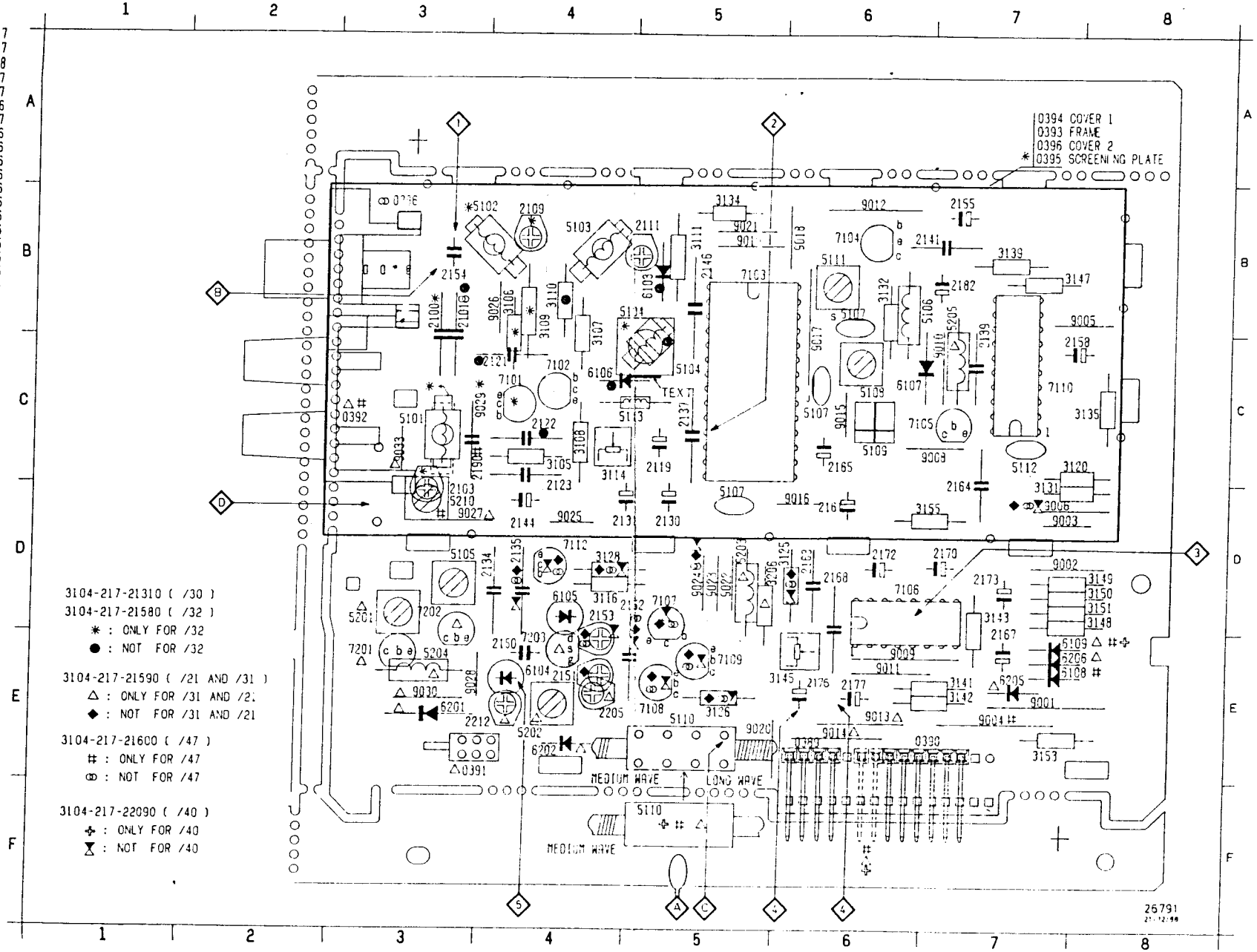

FM - MW - LW / FM - MW

SK						
Varicap alignment						
FM 87.5 - 108 MHz			108 MHz	5104		◇1 = 8V ↑
			87.5 MHz			◇1 = 2.7V ↑
LW 148-284 KHz			284 KHz	5105		◇5 = 7.8V
			148 KHz			◇5 = 1.0V
MW 522-1611 KHz			1611 KHz	5105		◇5 = 8.2V
			522 KHz	check		◇5 = 2.0V
FM-RF						
FM	87.5 MHz Δf = 500 KHz	◇B	87.5 MHz	5103		◇4 max.
				5102**		
				5101** ↑		
	108 MHz Δf = 500 KHz		108 MHz	2111		◇4 max.
				2109**		
				2103**		
FM-IF						
FM	108 MHz Δf = 500 KHz	◇B	108 MHz	5111	Symm + Linear	
Stereo decoder / Search sensitivity						
FM	98 MHz carrier	◇B	98 MHz	3145 ø		◇3 19 ± 0.05 KHz
	98 MHz 12 uV		98 MHz	3114	◇2 5V 0V	
AM-IF						
MW	450 KHz Δf = 10 KHz (50 Hz)	◇C via 100 nF	1611 KHz	5108	Symmetrical max fo ◇4	
AM-RF						
MW	603 KHz*	◇A	603 KHz	5110		◇4 max.
	1494 KHz*		1494 KHz	2151		
LW	155 KHz*	◇A	155 KHz	5110		◇4 max.
	275 KHz		275 KHz	2153		

* Mod 1KHz 30% AM

** For -/32/38 only

↑ Adust core to approximately 3mm below edge for -/32/38

↑ 10V and 1.15V for -/32/38

ø Ground pins 9 of 7106

FM - MW - SW

SK						
Varicap alignment						
FM 87.5 - 108 MHz			108 MHz	5104		◇1 = 8V
			87.5 MHz*			◇1 = 2.7V
MW 530-1700 KHz			1700 KHz	5105		◇5 = 8.2V
			530 KHz	check		◇5 = 1.0V
SW 3.82 - 12.1 MHz			12.1 MHz	5201		◇5 = 8.2V
			3.82 MHz	check		◇5 = 1.0V
FM-RF						
FM	87.5 MHz Δf = 500 KHz	◇B	87.5 MHz	5103		◇4 max.
	108 MHz Δf = 500 KHz		108 MHz	2111		◇4 max.
FM-IF						
FM	108 MHz Δf = 500 KHz	◇B	108 MHz	5111	Symm + Linear	
Stereo decoder / Search sensitivity						
FM	98 MHz carrier	◇B	98 MHz	3145 ø		◇3 19 ± 0.05 KHz
	98 MHz 12 uV		98 MHz	3114	◇2 5V 0V	
AM-IF						
MW	450 KHz Δf = 10 KHz (50 Hz)	◇C via 100 nF	1700 KHz	5108	Symmetrical max fo ◇4	
AM-RF						
MW	610 KHz*	◇A	610 KHz	5110		◇4 max.
	1600 KHz*		1600 KHz	2151		
SW	3.9 MHz	◇D	3.9 MHz	5202		◇4 max.
	11.9 MHz		11.9 MHz	2205		

* Mod 1KHz 30% AM

ø Ground pin 9 of 7106

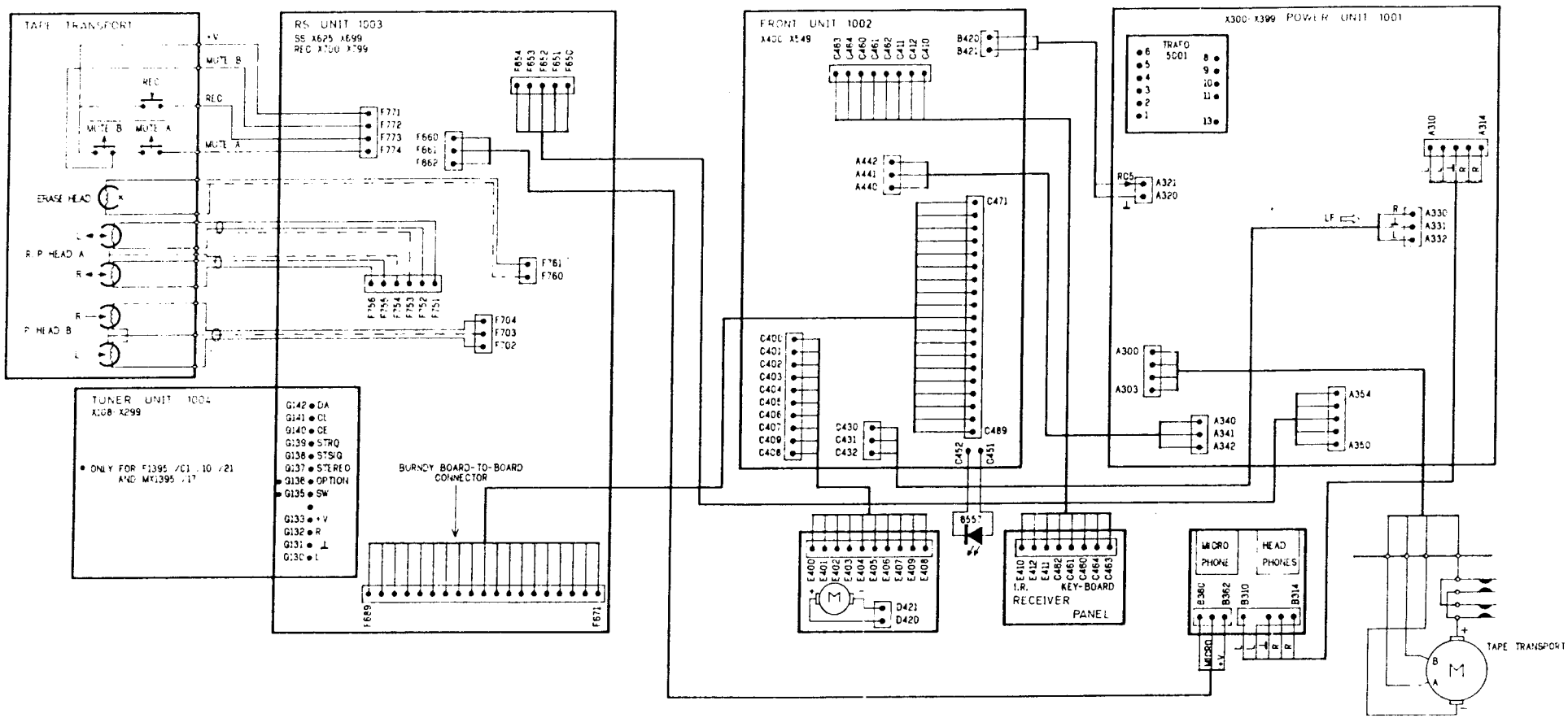

26784
21/12/88

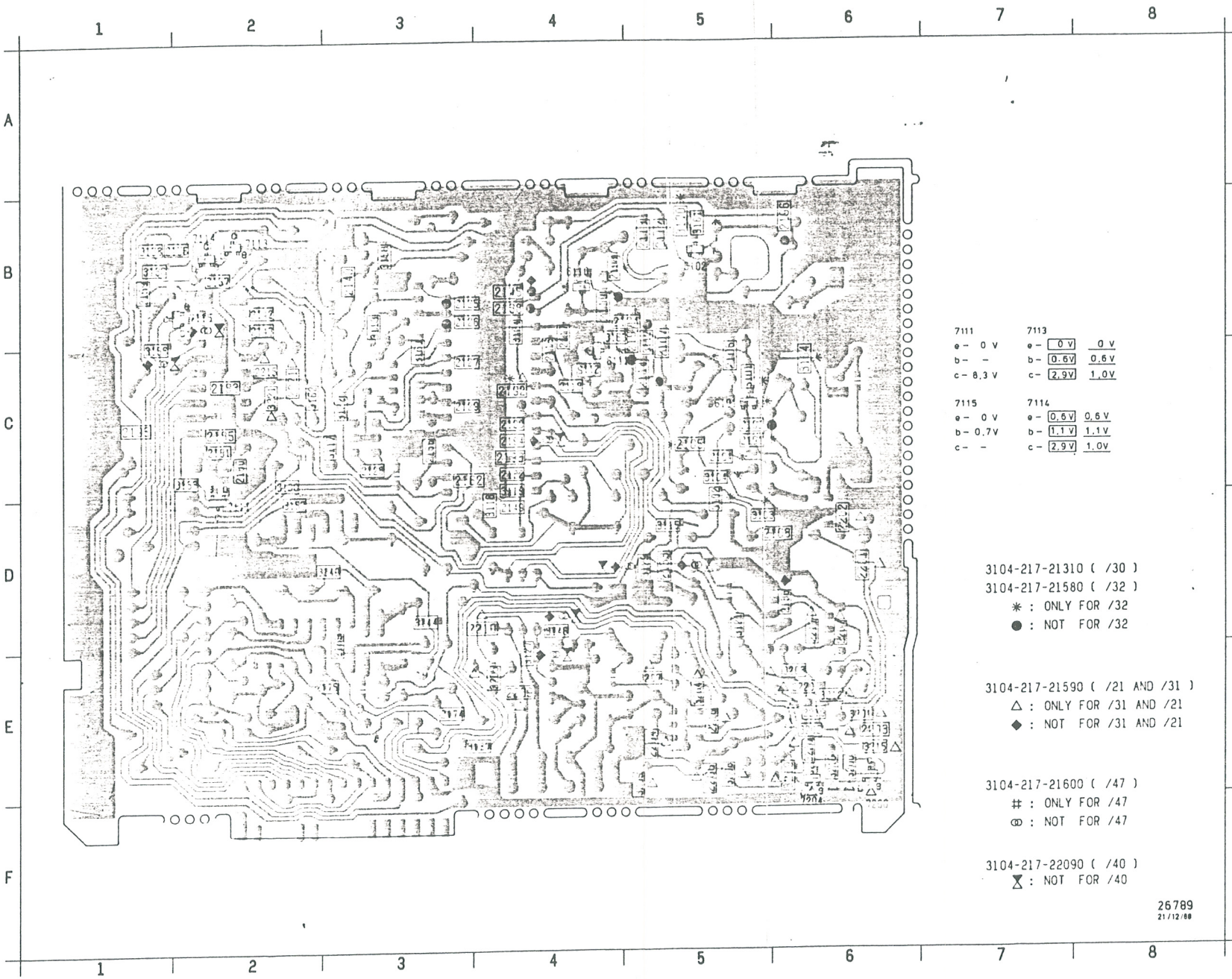

7111		7113		
e -	0 V	e -	0 V	0 V
b -	-	b -	0.6V	0.6 V
c -	8,3 V	c -	2,9V	1,0V
7115		**7114**		
e -	0 V	e -	0,6 V	0,6 V
b -	0,7V	b -	1,1 V	1,1 V
c -	-	c -	2,9 V	1,0V

3104-217-21310 (/30)
3104-217-21580 (/32)
✳ : ONLY FOR /32
● : NOT FOR /32

3104-217-21590 (/21 AND /31)
△ : ONLY FOR /31 AND /21
◆ : NOT FOR /31 AND /21

3104-217-21600 (/47)
: ONLY FOR /47
⊗ : NOT FOR /47

3104-217-22090 (/40)
⧖ : NOT FOR /40

26789
21/12/88

2102	C 5	2221	C 2				
2104	C 5	3101	C 5				
2105	C 5	3102	D 5				
2106	C 5	3103	D 5				
2107	B 5	3104	C 5				
2108	D 6	3112	B 5				
2110	B 4	3113	B 3				
2112	B 5	3115	D 5				
2113	B 5	3117	C 3				
2114	C 5	3118	D 4				
2115	C 4	3119	C 4				
2116	C 4	3121	D 5				
2117	B 4	3122	C 3				
2118	C 4	3124	B 4				
2120	C 4	3127	E 4				
2124	B 5	3129	D 5				
2125	B 3	3130	C 2				
2126	B 3	3133	C 2				
2127	C 3	3136	B 1				
2128	C 3	3137	E 4				
2129	C 3	3138	B 1				
2132	C 4	3140	D 3				
2133	D 5	3144	D 3				
2136	D 6	3146	D 4				
2136	D 6	3156	B 1				
2138	B 4	3157	D 2				
2140	B 3	3158	B 3				
2142	B 2	3160	C 3				
2143	B 2	3161	B 5				
2145	B 4	3162	C 2				
2149	D 4	3163	B 4				
2156	B 2	3164	C 6				
2157	B 2	3170	B 5				
2159	B 1	3200	E 6				
2162	C 3	3201	E 6				
2166	C 3	3202	E 6				
2169	D 3	3203	E 6				
2174	E 3	3204	E 5				
2175	E 3	3205	E 4				
2180	C 2	3207	E 5				
2181	C 2	3208	E 5				
2183	C 2	3209	E 5				
2185	C 2	3210	E 6				
2191	C 5	3212	E 6				
2192	C 4	3215	E 6				
2193	C 4	3219	E 6				
2194	C 4	3220	E 6				
2195	C 1	3221	C 2				
2196	B 6	6101	C 5				
2197	B 5	6102	B 5				
219b	B 4	6110	B 4				
2201	D 6	6111	C 4				
2202	D 6	7111	D 2				
2203	E 6	7113	B 2				
2204	E 5	7114	B 2				
2206	E 5	7115	B 2				
2207	D 6	7200	F 6				
2209	E 4	7204	F 6				
2210	D 4						
2215	C 2						
2216	E 5						
2217	D 6						
2219	E 6						
2220	E 6						

Carbon film 0.2 W CR16	70°C	5%	
Carbon film 0.33 W CR25	70°C	5%	
Carbon film 0.5 W CR37	70°C	5%	
Standard film 0.5 W SFR16T	70°C	5%	
Standard film 0.4 W SFR25	70°C	5%	
Metal film 0.6 W MRS25	70°C	5%	
Safety resistor			

(C) Chip component

Plate ceramic Tuning < 120 pF	2%
Plate ceramic Others	−20/+80%
Tubular ceramic	
Polystyrene film / foil	1%
Polyestor Film / foil	10%
Mylar	10%
Electrolytic	

a	= 2.5 V
b	= 4 V
c	= 6.3 V
d	= 10 V
e	= 16 V
f	= 25 V
g	= 40 V
h	= 63 V
j	= 100 V
k	= 125 V
m	= 150 V
n	= 160 V
q	= 200 V
r	= 250 V
s	= 300 V
t	= 350 V
u	= 400 V
v	= 500 V
w	= 630 V
x	= 1000 V
A	= 1.6 V
B	= 6 V
C	= 12 V
D	= 15 V
E	= 20 V
F	= 35 V
G	= 50 V
H	= 75 V
I	= 80 V

26338

	7103		7110		7106	
1	1.0V	0 V	1.8V	1.8 V	10.9V	11.1V
2	1.0V	0 V	–	–	1.4V	1.4V
3	0 V	0 V	–	–	1.5V	1.5V
4	1.3V	0 V	–	–	2.6V	2.6V
5	2.0V	0V	–	–	2 6V	2.6V
6	3.7V	0 V	5.0V	0.2V	5.0V	MONO
7	6.2V	7.7V	0V	0 V	0.7V	STEREO
8	6.2V	7.7V	0.1V	2.3V	5.0 V	
9	2.3V	2.3V	2.3V	0.1V	0V	0 V
10	2.3V	2.3V	0.7V	0.7V	0.5V	0.5V
11	5.0V	5.0V	0.1V	0.1V	0.1V	STEREO
12	0V	1.7V	0.1V	0.1V	2.3V	MONO
13	1.9V	0 V	0.1V	1.9V	2.3V	
14	2.0V	2.6V	3.2V	0.1V	1.3V	1.3V
15	6.8V	7.2V	5.6V	5.7V	1.3V	1.3V
16	1.9V	2.7V	5.6V	5.7V	–	–
17	0.7V	1.3V	–	–	1.3V	1.3V
18	0.5V	0.5V	1.1V	1.1V	1.3V	1.3V
19	0V	0 V	0V	0 V	1.3V	1.3V
20	2.3V	0.2V	0.9V	0.9V	0.2V	0.4V
21	2.3V	0.1V				
22	4.5V	7.2V				
23	0V	2.2V				
24	0V	2.2V				
25	2.3V	0.1V				
26	6.2V	7.7V				
27	6.1V	7.7V				
28	6.1V	7.7V				

+ 10 ≡ +V = 14.2 V

+ 7 = 6.2V 7.7 V

7102	7104		7105	7107
e - 12.1V	e - 0V	0V	e - 0 V	e - 0 V
b - 11.3V	b - 0.7V	0.7V	b - 1.6 V	b - –
c - 0.5V	c - 3.2V	3.9 V	c - 0.6V	c - 0.3V

7108	7109	7112
e - 0V	e - 0 V	e - 0 V
b - 0.7 V	b - –	b - –
c - –	c - 0.7V	c - 6.0V

V ELECTRONIC VOLTMETER IMP. ≥ 1MΩ

V General

V FM

V AM

Measurement done with AC supply

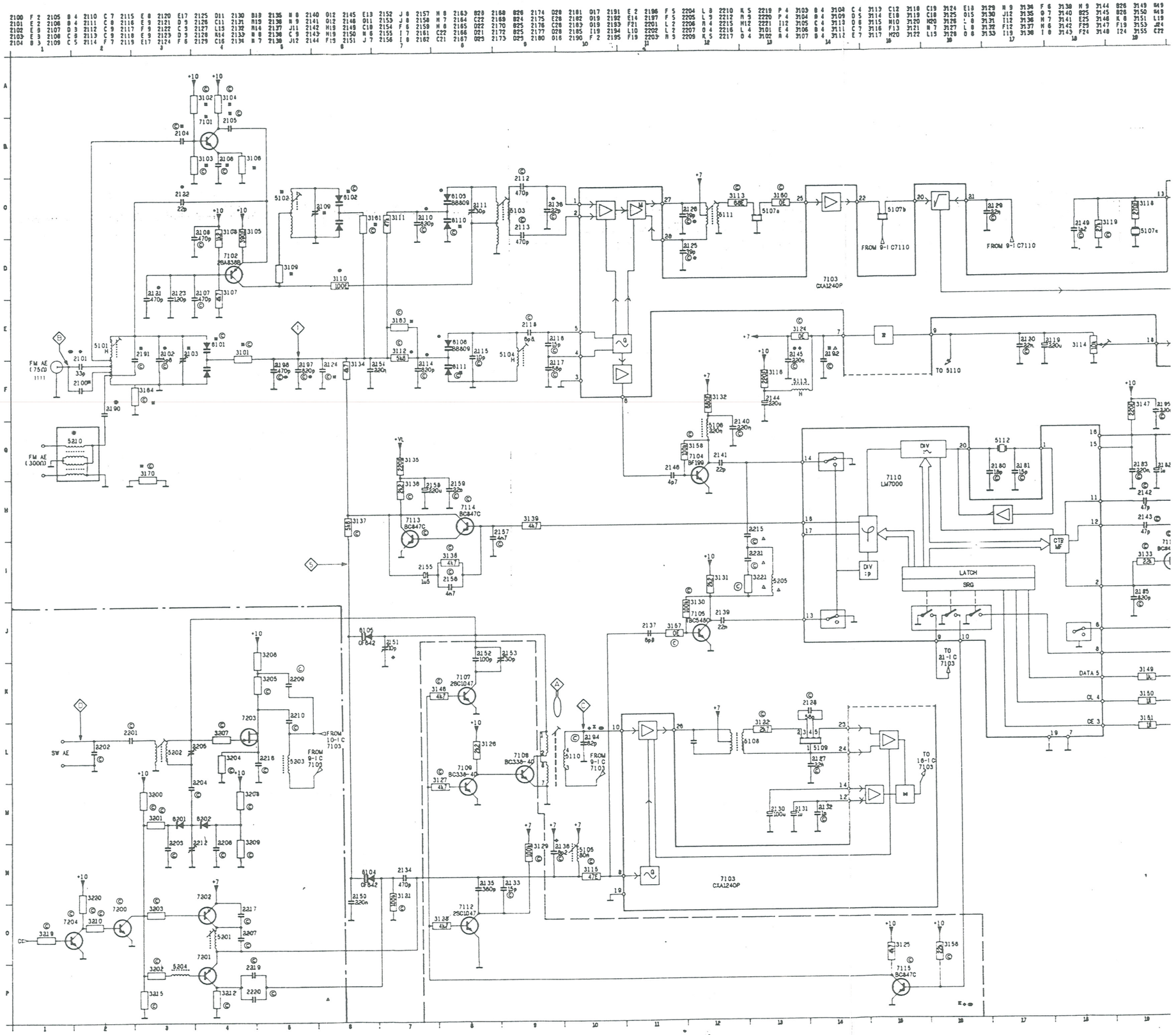

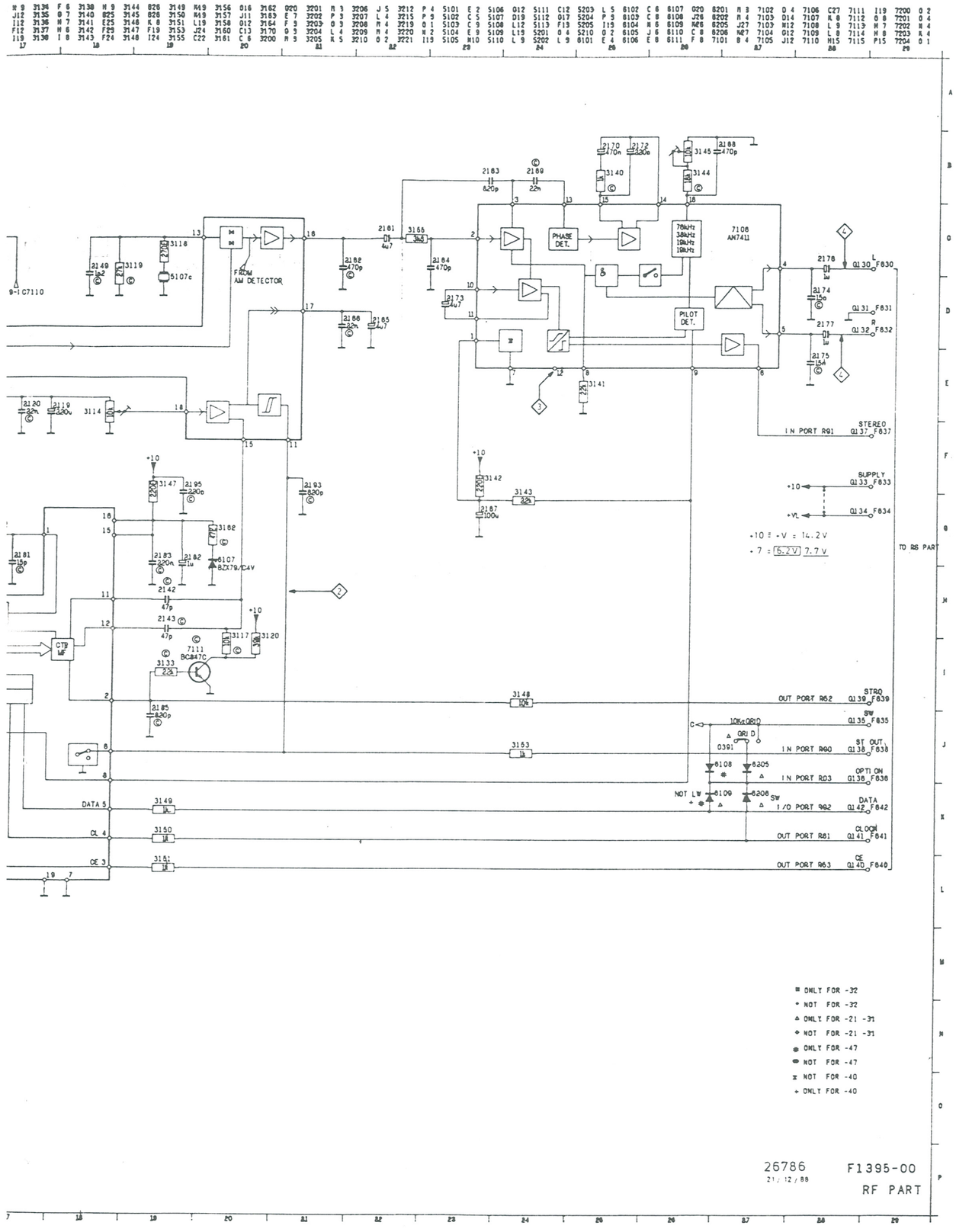

26786
21/12/88

F1395-00
RF PART

7301 / 7302

1 - -	+Vcc = 23.0V
2 - -23.1V	-Vcc = -23.1V
3 - -22.0V	+V = 14.2V
4 - -23.1V	+14 = 14.2V
5 - -	+12 = 12.1V
6 - 23.0V	+12A = 11.9V
7 - -	
8 - 23.0V	
9 - -	

7340

e - 0 V	
b - 0.6 V	
c - 1.4 V	

7364

e - 0 V	
b - -	
c - 5.1V	

7370

e - 14.4V	
b - 15.6V	
c - 27.6V	

7380

e - 12.1V	
b - 13.3V	
c - 27.6V	

7381

e - 11.9V	
b - 12.1V	
c - 13.3V	

7390

e -	11.4V ▷	11.3V ▷▷
b -	10.8V ▷	12.8V ▷▷
c -	11.4V ▷	8.3V ▷▷

V ELECTRONIC VOLTMETER IMP. ≥ 1MΩ

V General
V▷▷ Dubbing at high speed
V▷ Dubbing at normal speed

Measurement done with AC supply

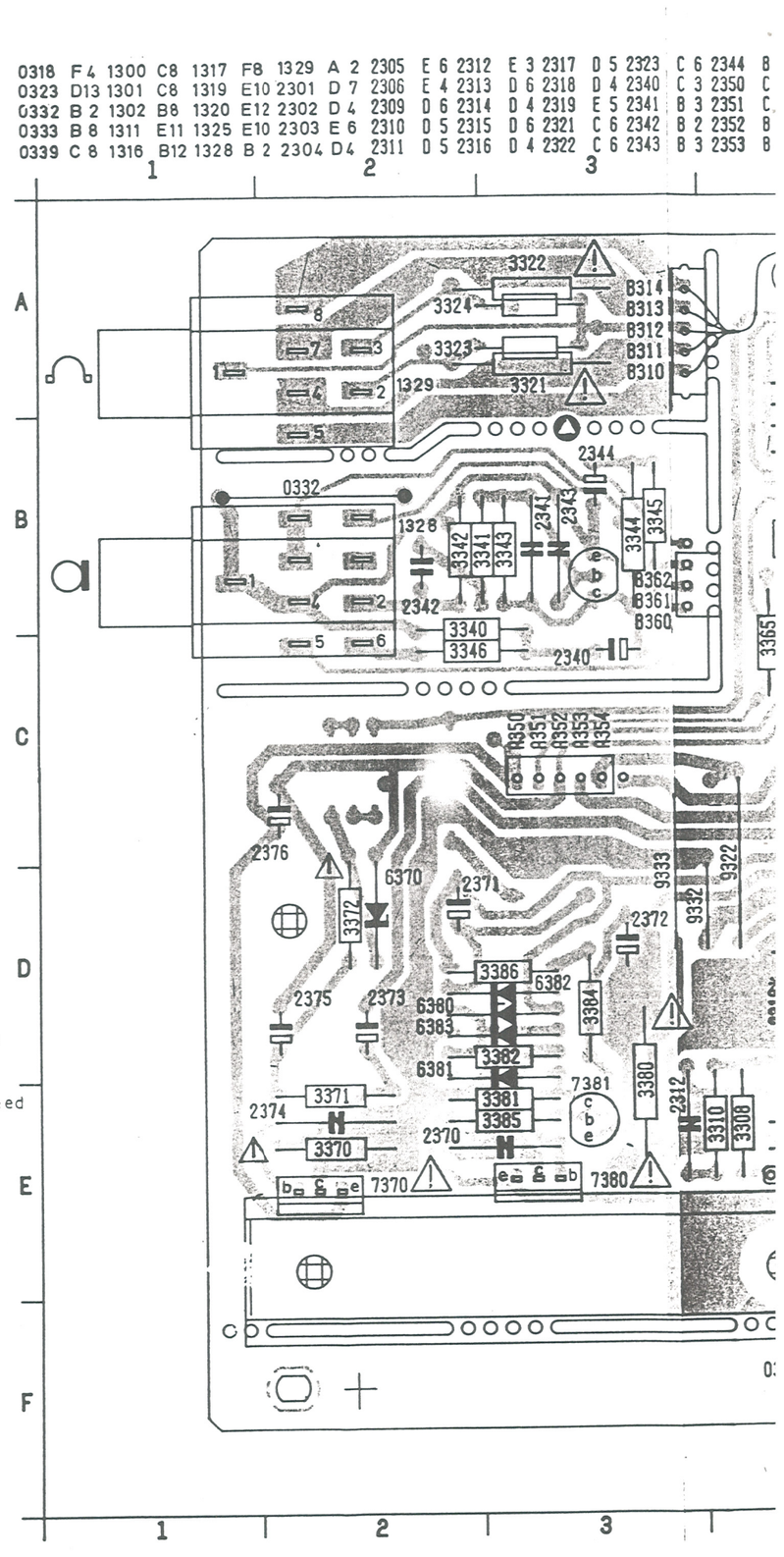

E 3 2317 D 5 2323 C 6 2344 B 3 2354 B 6 2364 C 4 2374 E 2 2390 A 5 3304 D 5 3309 D 6 3314 C 5 3340 C 2 3345 B 3 3371 E 2 3384 D 3 3392 B 4 6360 B 7 6370 D 2 6390 B 4 7370 E 2 9302 B12 9311 B 7 9319 B 5 9326 D 5 9332 D 3
D 6 2318 D 4 2340 C 3 2350 C 7 2360 A 8 2370 E 2 2375 D 2 2399 D10 3305 E 6 3310 E 4 3321 A 3 3341 B 3 3346 C 2 3372 D 2 3385 E 3 3398 E11 6361 A 7 6380 D 2 7301 E 6 7380 E 3 9303 D12 9312 B 7 9320 B 5 9327 D 5 9333 D 3
D 4 2319 E 5 2341 B 3 2351 C 7 2361 B 6 2371 D 3 2376 C 2 3301 D 6 3306 E 4 3311 D 6 3322 A 3 3342 B 2 3364 C 5 3380 E 3 3386 D 3 3399 D11 6362 B 7 6381 D 2 7302 E 4 7381 E 3 9304 C12 9313 D 5 9322 D 4 9328 D 5 9337 C 6
D 6 2321 C 6 2342 B 2 2352 B 7 2362 A 7 2372 D 3 2381 B 5 3302 D 4 3307 D 6 3312 D 4 3323 A 2 3343 B 3 3365 C 4 3381 E 3 3390 A 4 5001 D 9 6363 A 7 6382 D 3 7340 B 3 7390 A 4 9307 D10 9315 D 7 9323 B 4 9329 E 5 9339 D12
D 4 2322 C 6 2343 B 3 2353 B 6 2363 A 6 2373 D 2 2382 E10 3303 D 6 3308 E 4 3313 C 5 3324 A 2 3344 B 3 3370 E 2 3382 D 3 3391 A 4 6350 B 7 6364 B 6 6383 D 2 7364 C 4 9301 C12 9310 A 6 9316 D 7 9325 D 5 9330 E 5

3 4 5 6 7 8 9 10 11 12 13

A B C D E F

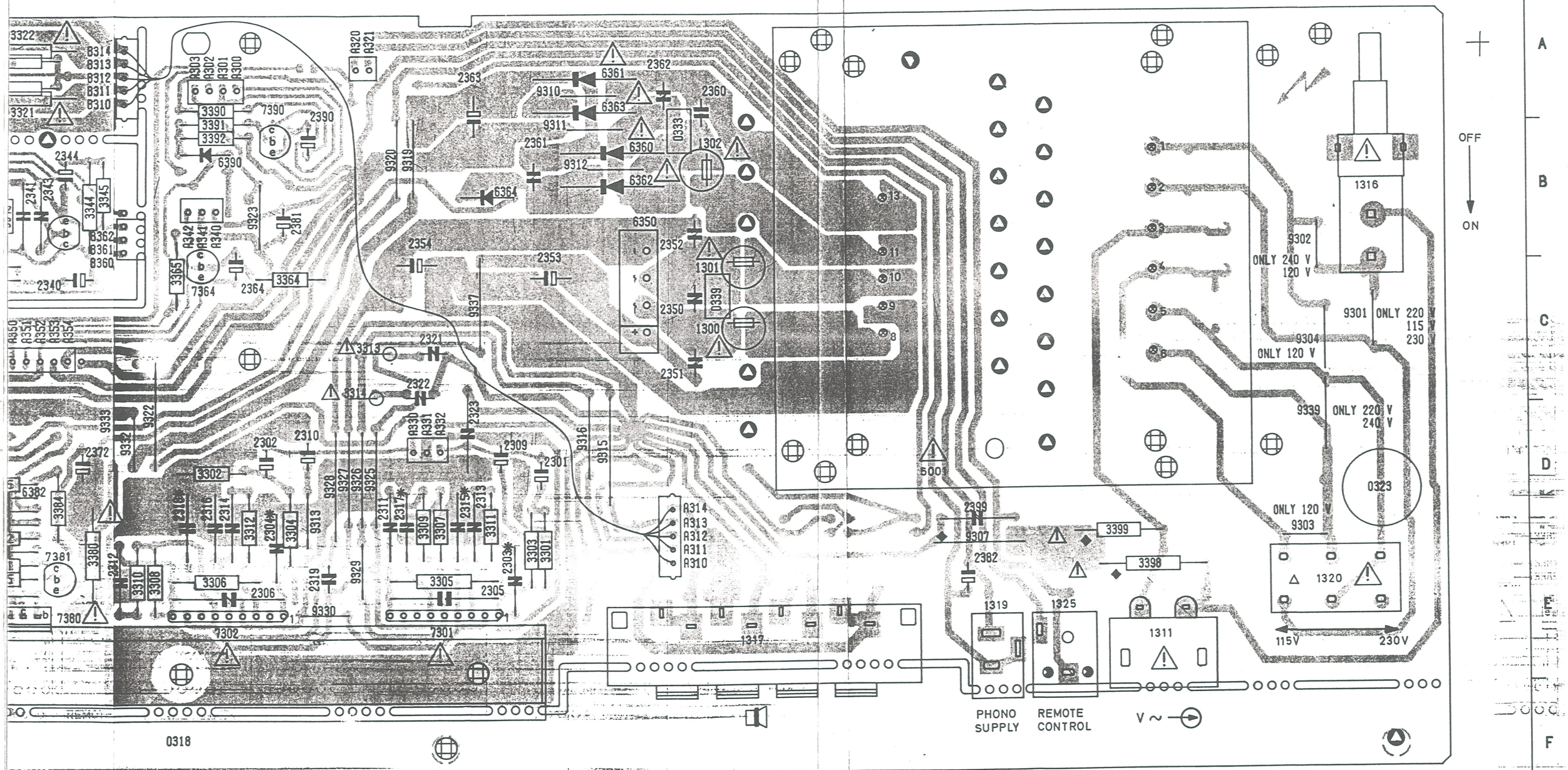

* ONLY /02 AND /03 ◆ ONLY /17 △ ONLY /01

3104-217-21500 PUNT 2

26790
21/12/88

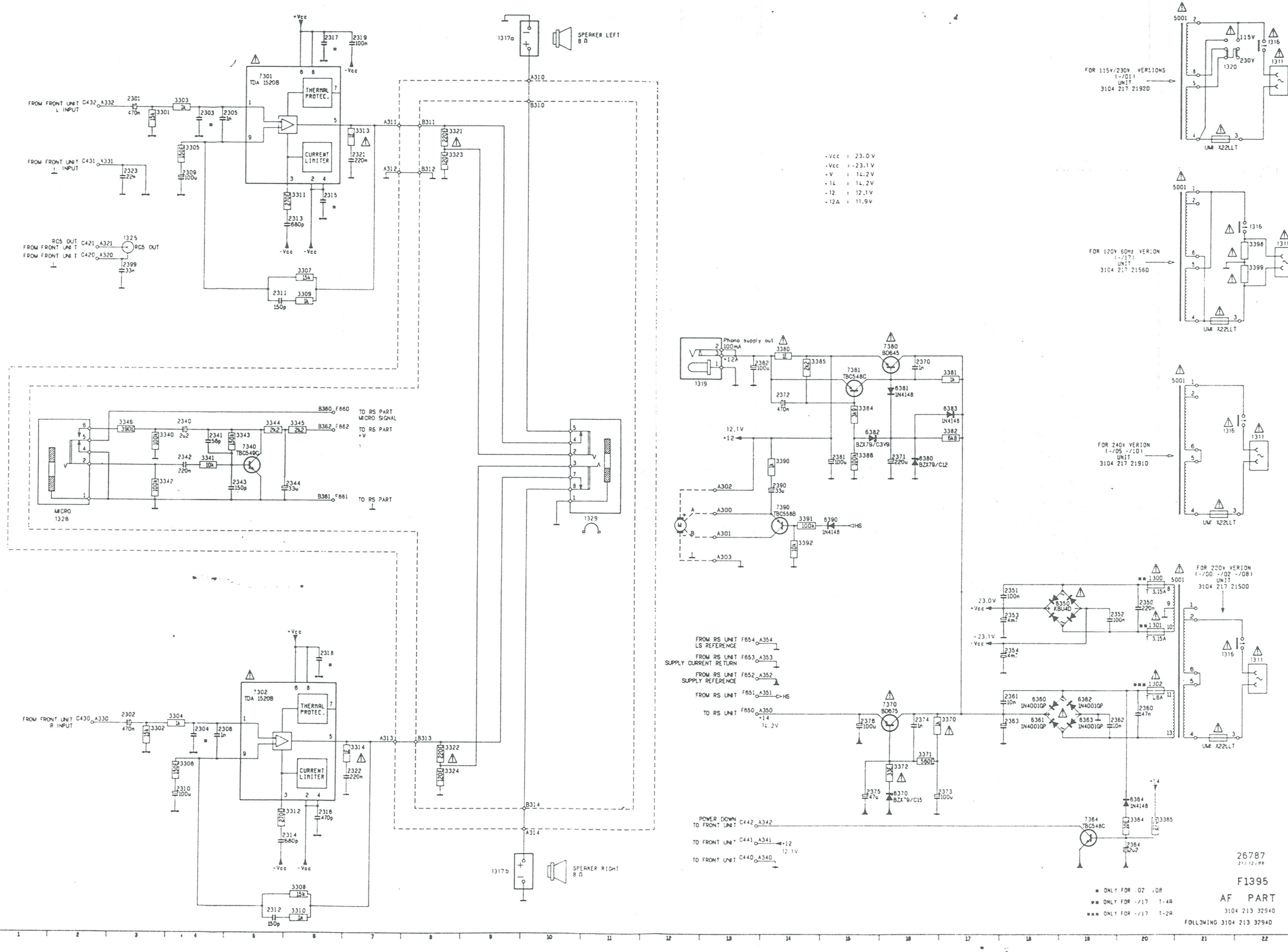
+Vcc : 23.0 V
-Vcc : -23.1 V
+V : 14.2 V
+14 : 14.2 V
+12 : 12.1 V
+12A : 11.9 V
7301 TDA 1520B
THERMAL PROTEC.
CURRENT LIMITER
7302 TDA 1520B
THERMAL PROTEC.
CURRENT LIMITER
FROM FRONT UNIT L INPUT C432 A332
FROM FRONT UNIT L INPUT C431 A331
FROM FRONT UNIT R INPUT C430 A330
RC5 OUT C421 A321
FROM FRONT UNIT C420 A320
RC5 OUT
SPEAKER LEFT 8 Ω
SPEAKER RIGHT 8 Ω
TO RS PART MICRO SIGNAL
TO RS PART +V
TO RS PART
MICRO 1328
1329
Phono supply out 100mA
FROM RS UNIT LS REFERENCE F854 A354
FROM RS UNIT SUPPLY CURRENT RETURN F853 A353
FROM RS UNIT SUPPLY REFERENCE F852 A352
FROM RS UNIT F851 A351 HS
TO RS UNIT F850 A350 +14 14.2V
POWER DOWN TO FRONT UNIT C442 A342
TO FRONT UNIT C441 A341 +12 12.1V
TO FRONT UNIT C440 A340
FOR 115V/230V VERSIONS (-/011) UNIT 3104 217 21920
FOR 120V 60Hz VERION (-/172) UNIT 3104 217 21560
FOR 240V VERION (-/05 -/101) UNIT 3104 217 21910
FOR 220V VERION (-/00 -/02 -/08) UNIT 3104 217 21500
UM X22LLT
6350 KBU4D
7370 BD675
7380 BD645
7381 BC548C
7384 BC548C
7390 BC558B
6370 BZX79/C15
6380 BZX79/C12
6382 BZX79/C3V9
6381 1N4148
6383 1N4148
6384 1N4148
6390 1N4148
6360 1N4001GP
6361 1N4001GP
6362 1N4001GP
6363 1N4001GP
26787
21/12/88
F1395
AF PART
3104 213 32940
FOLLOWING 3104 213 32940
■ ONLY FOR 02 08
■■ ONLY FOR -/17 T-4A
■■■ ONLY FOR -/17 T-2A

2625	E2	2639	E3	2661	A2	2722	B9	2739	D8	3625	E2	3639	E4	3656	B4	3676	C2	3706	D9	3724	F11	3751	E10	9701	A12	9726	D7	9744	F5	9768	D2	9786	B5	9809	E2	9833	C5
2626	F2	2640	E3	2662	A3	2723	B9	2740	D8	3626	F2	364	B4	3657	D3	3677	C3	3709	D8	3725	C6	3752	C11	9702	A12	9727	E7	9747	C5	9771	C3	9787	B5	9811	B8	9834	A4
2627	E3	2641	E4	2665	D6	2725	C7	2741	B12	3627	E2	3640	F4	3658	D2	3678	C2	371	C8	3726	D6	5701	B8	9703	A11	9728	E7	9748	C5	9772	C3	9790	C5	9812	E3		
2628	F2	2642	E2	2701	C10	2726	A7	2742	B11	3628	F2	3641	E3	3663	D5	3679	C3	3710	E9	3727	C11	5702	B12	9704	C12	9732	E6	9749	C5	9774	B3	9792	B5	9813	F3		
2629	E3	2651	B3	2702	C10	2727	D7	2743	B12	3629	E2	3642	F2	3664	C5	368	E6	3711	D9	3729	C11	5703	B11	9705	C12	9733	E6	9751	D5	9775	B3	9793	B5	9814	E3		
2630	E3	2652	B3	2705	D9	2728	C12	2744	B11	3630	F3	3643	F3	3665	C5	3681	D5	3712	D9	373	D9	5706	E5	9706	C12	9735	F7	9752	F6	9776	A4	9794	C5	9815	F5		
2631	E3	2653	A2	2706	D9	2729	C10	2745	B12	3631	E3	3644	F3	3666	C4	3682	D5	3713	E9	3730	C11	6701	B7	9707	C12	9736	F7	9753	F5	9777	B4	9795	C5	9816	E2		
2632	F3	2654	C2	2707	C11	2730	B10	2746	B11	3632	F3	3645	E4	3667	B5	369	B3	3714	E8	3731	C11	6702	C6	9712	B10	9737	F7	9754	F5	9778	B4	9797	B6	9819	A6		
2633	E3	2655	B2	2708	D11	2731	C10	2748	A11	3633	E3	365	E12	3668	B4	370	B7	3716	B8	3732	C11	6705	D6	9713	A10	9738	F7	9755	E5	9779	B4	9798	B6	9820	A6		
2634	F3	2656	C2	2709	D10	2732	B10	2749	D10	3634	F3	3651	D2	3671	B2	3701	D10	3717	B9	3733	C11	6706	C6	9721	B2	9739	F7	9756	E5	9781	B5	9799	B7	9822	D7		
2635	E4	2657	B2	2710	D10	2733	B11	2750	E10	3635	E3	3652	D2	3672	C3	3702	D10	3719	B9	3734	E10	7625	E4	9722	B2	9740	F6	9758	D5	9782	A5	9803	C6	9823	D7		
2636	F4	2658	C3	2719	C8	2734	B10	2751	E10	3636	F3	3653	D2	3673	B2	3703	D9	3721	B9	3739	B7	7650	B2	9723	C2	9741	F6	9759	D5	9783	A5	9804	C7	9824	C8		
2637	E4	2659	B3	2720	B9	2735	C12	2752	E10	3637	E4	3654	D2	3674	C2	3704	D9	3722	B10	3742	C11	7701	C9	9724	C2	9742	F6	9761	D5	9784	A5	9807	E7	9825	C8		
2638	F4	2660	C2	2721	C10	2736	C11	361	D2	3638	F4	3655	C5	3675	B2	3705	D9	3723	D6	3746	A10	7705	D6	9725	D7	9743	F6	9763	D5	9785	B5	9808	C9	9832	C4		

7701	7625
1- 7.0V	1- 7.1V
2- 7.0V	2- 7.1V
3- 7.0V	3- 7.1V
4- 7.0V	4- 0 V
5- 7.0V	5- 7.1V
6- 7.0V	6- 7.1V
7- 0.6V Play B	7- 7.1V
- 1.2V Play A	8-14.0V
8- 0.1V Play B	
-12.4V Play A	
9-14.2V	7650
10- 0.1V Play	1- 7.1V
-14.0V Rec	2- 7.1V
11- 0.3V	3- 7.1V
12- 7.0V	4- 0 V
13- 0 V	5- 7.1V
14-14.1V	6- 7.1V
15-10.0V	7- 7.1V
16-14.1V	8-14.0V
17- 0 V	
18-14.1V	
19- 0.7V	7705
20-14.2V	e -13.8V Rec
21- 7.0V	-13.5V Dubbing
22- 7.0V	b -13.6V Rec
23- 7.0V	-12.8V Dubbing
24- 7.0V	c - -
25- 7.0V	-13.4V Dubbing
26- 7.0V	
27- 7.0V	
28- 7.0V	
29- 7.0V	
30- 7.0V	
31- 7.0V	
32- 7.0V	
33- 7.0V	
34- 7.0V	
35- -	
36- 7.0V	
37- -	
38- 7.0V	
39- 7.0V	
40- 7.0V	

V ELECTRONIC VOLTMETER IMP. ≥ 1MΩ → V General

Measurement done with AC supply

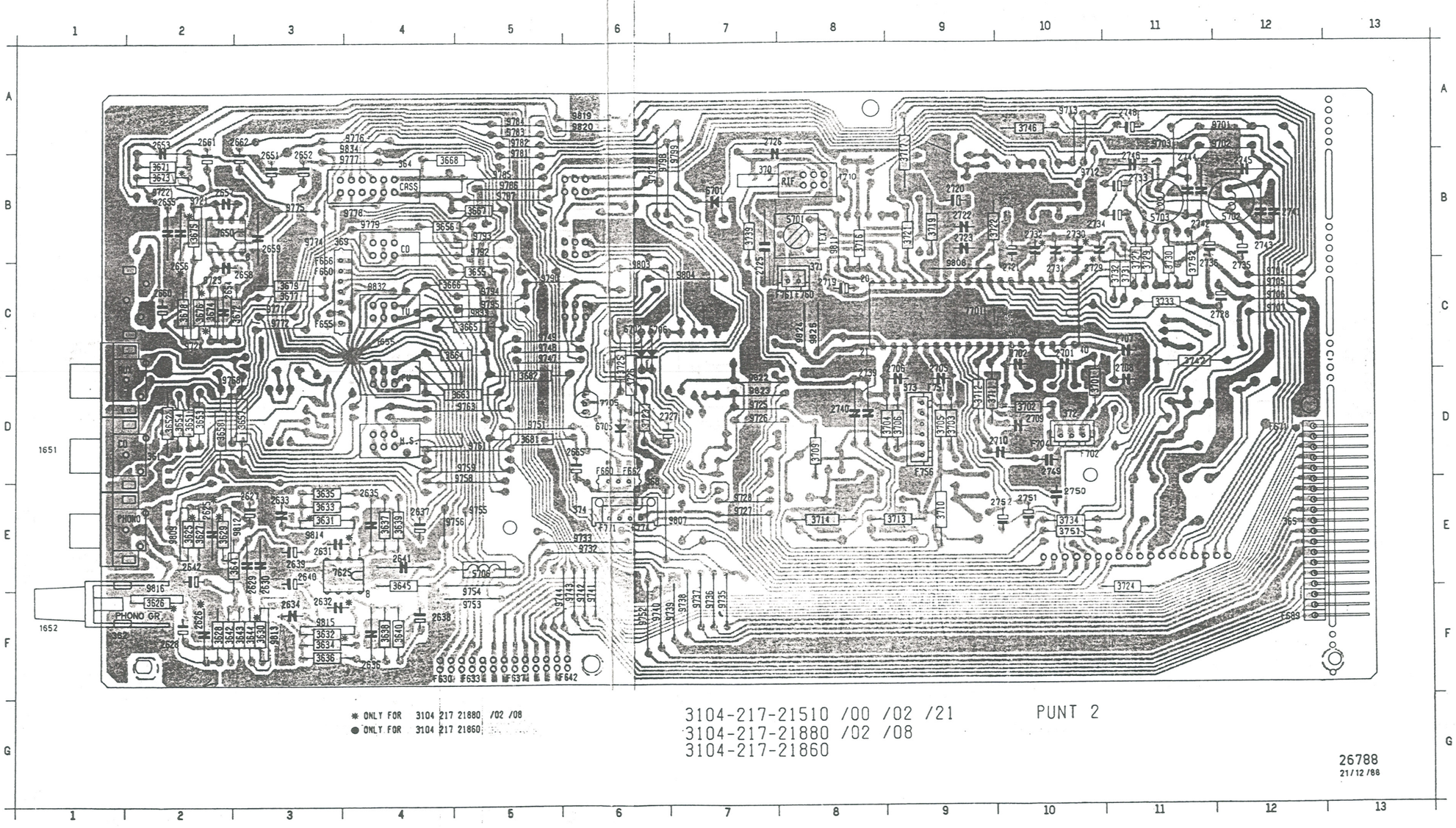

3104-217-21510 /00 /02 /21 PUNT 2
3104-217-21880 /02 /08
3104-217-21860

26788
21/12/88

2625	B20	2631	B21	2637	B24	2651	B27	2657	B27	2665	G26	2708	B13	2722	C14	2729	A13	2735	E5	2743	A14	2750	E13	3628	I20	3634	J21	3640	I24	3651	E20	3657	D21	3667
2626	I20	2632	I21	2638	I24	2652	I27	2658	I27	2701	L6	2709	I13	2723	F13	2730	H13	2736	G5	2744	H14	2751	G16	3629	B21	3635	D22	3641	A21	3652	L20	3658	K21	3668
2627	B21	2633	C22	2639	D21	2653	A27	2659	A29	2702	M6	2710	B13	2725	C4	2731	G6	2739	C3	2745	B14	2752	E16	3630	I21	3636	J22	3642	H21	3653	E21	3663	B26	3671
2628	I21	2634	J22	2640	J21	2654	H27	2660	D27	2705	A5	2719	N6	2726	C4	2732	E6	2740	D3	2746	I14	3625	B20	3631	C21	3637	D23	3643	A20	3654	K21	3664	I26	3672
2629	B21	2635	C23	2641	A23	2655	B28	2661	C30	2706	H5	2720	E5	2727	M14	2733	A14	2741	B14	2748	N15	3626	I20	3632	J21	3638	J23	3644	A20	3655	E26	3665	F26	3673
2630	I21	2636	J23	2642	A20	2656	I28	2662	I30	2707	I19	2721	F14	2728	K13	2734	H14	2742	I14	2749	H13	3627	B20	3633	C21	3639	B24	3645	A22	3656	K26	3666	M26	3674

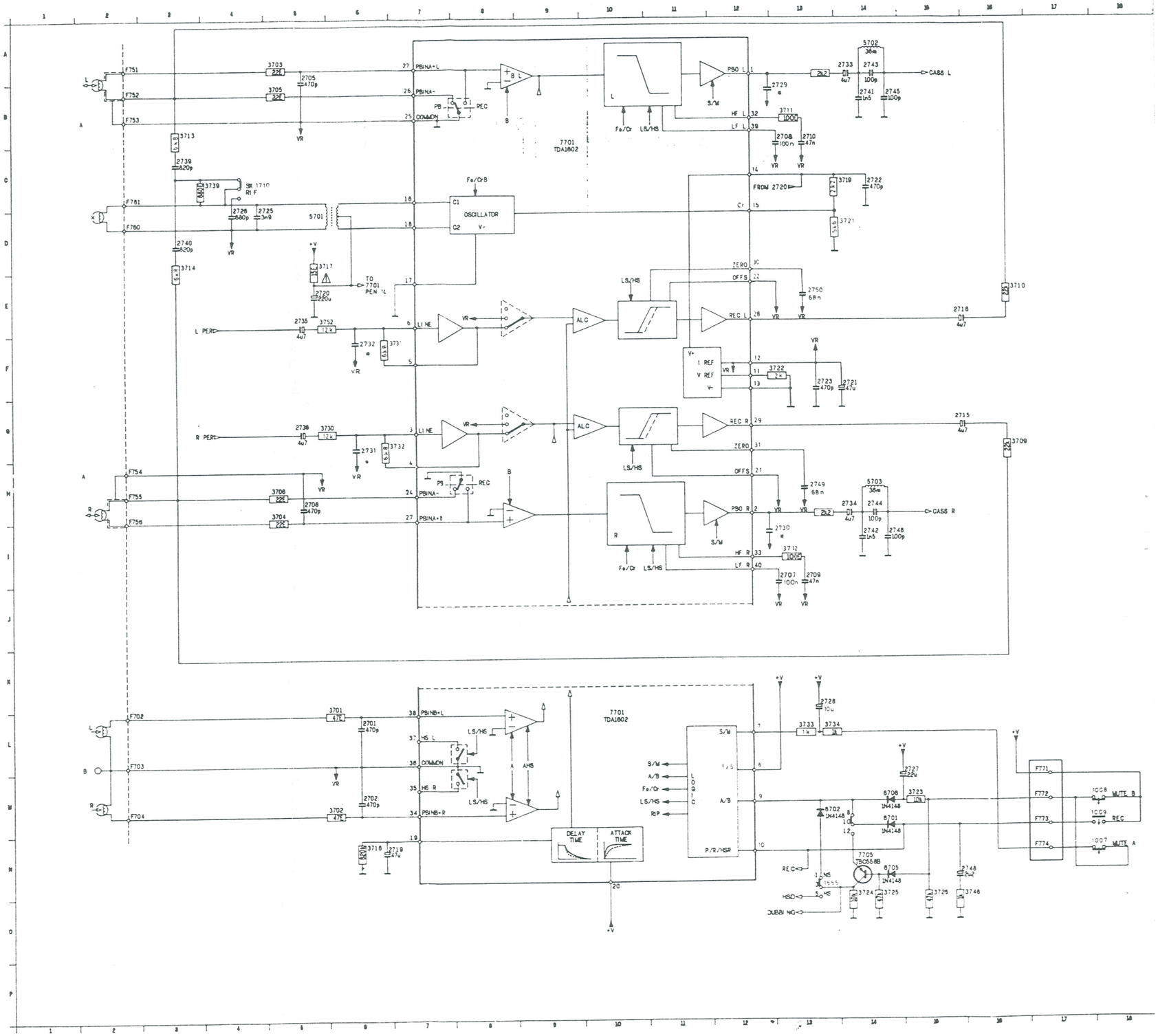

G26	2708	B13	2722	C14	2729	A13	2735	E5	2743	A14	2750	E13	3628	I20	3634	J21	3640	I24	3651	E20	3657	D21	3667
L6	2709	I13	2723	F13	2730	H13	2736	G5	2744	H14	2751	G16	3629	B21	3635	D22	3641	A21	3652	L20	3658	K21	3668
M6	2710	B13	2725	C4	2731	G6	2739	C3	2745	B14	2752	E16	3630	I21	3636	J22	3642	H21	3653	E21	3663	B26	3671
A5	2719	N6	2726	C4	2732	E6	2740	D3	2746	I14	3625	B20	3631	C21	3637	D23	3643	A20	3654	K21	3664	I26	3672
H5	2720	E5	2727	M14	2733	A14	2741	B14	2748	N15	3626	I20	3632	J21	3638	J23	3644	A20	3655	E26	3665	F26	3673
I19	2721	F14	2728	K13	2734	H14	2742	I14	2749	H13	3627	B20	3633	C21	3639	B24	3645	A22	3656	K26	3666	M26	3674

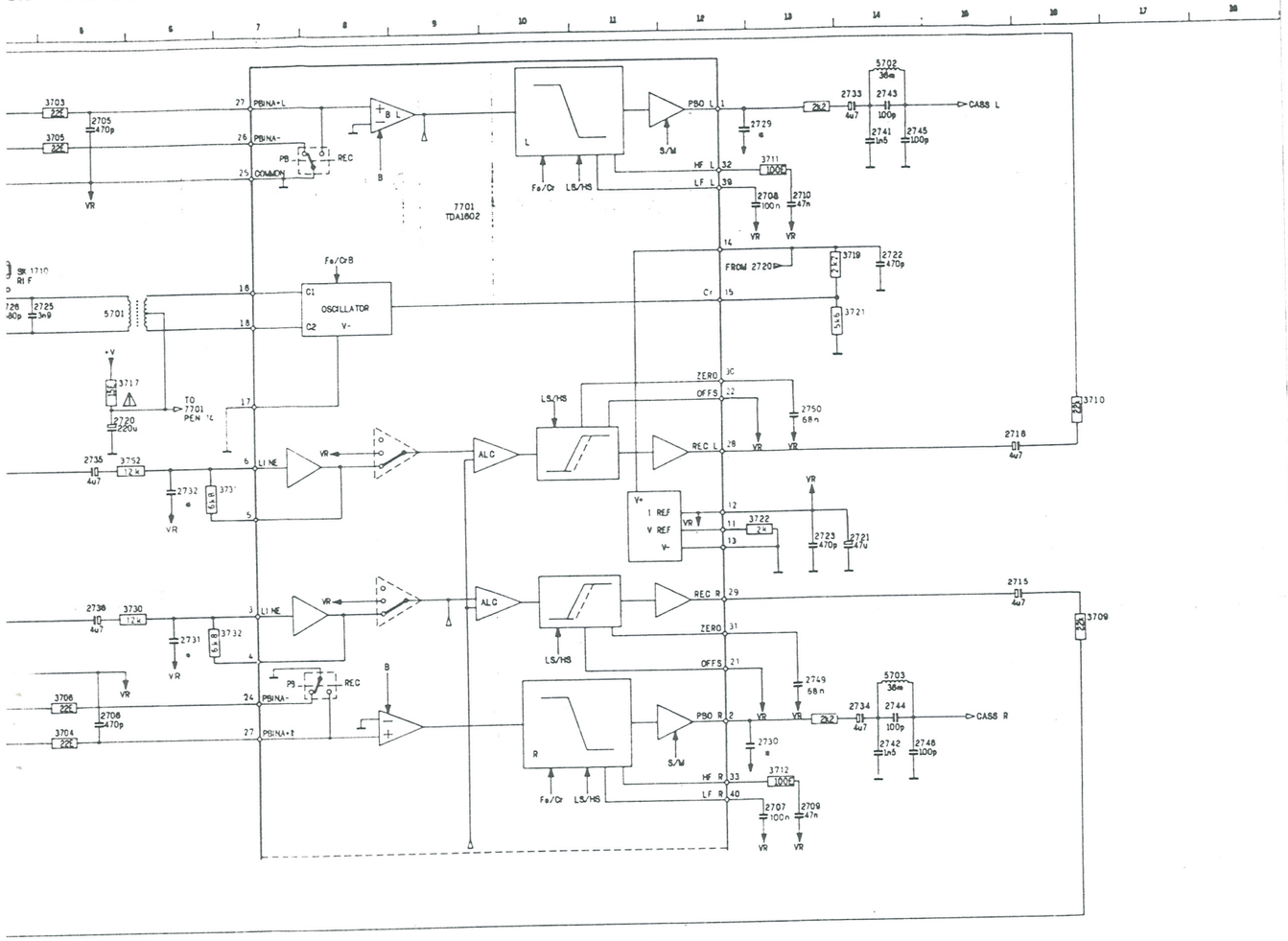

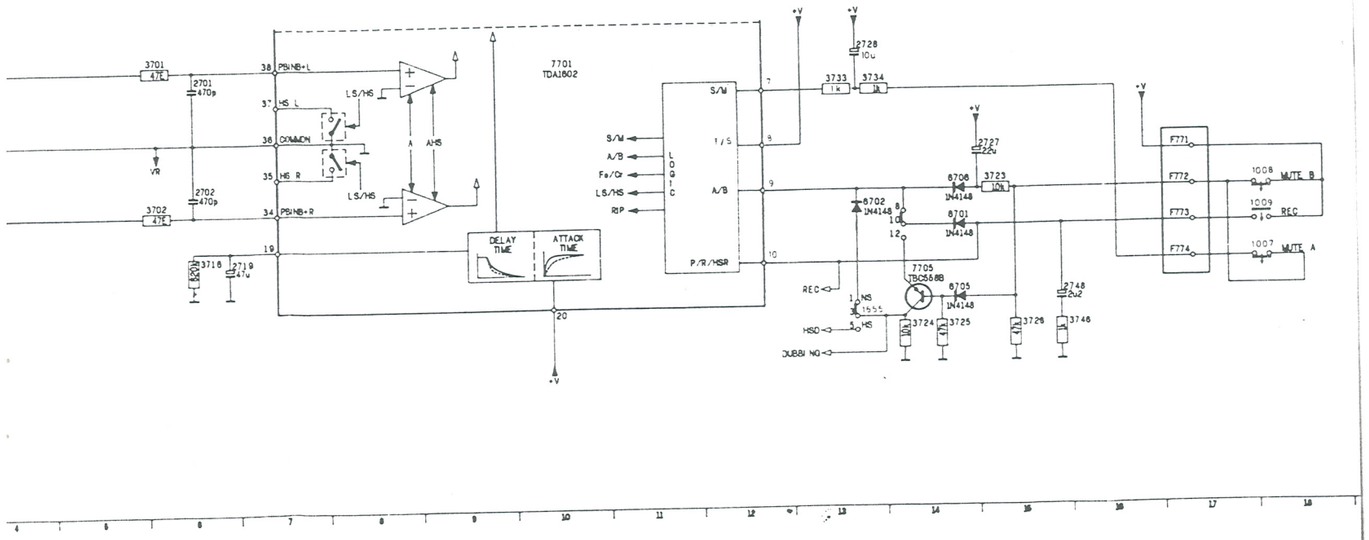

3667	E26	3675	C27	3682	H26	3706	H5	3714	D3	3723	M15	3730	G6	3742	N13	5703	H14	7625	I23	7705	N14
3668	L26	3676	J27	3701	K6	3709	G16	3716	N6	3724	N14	3731	E6	3746	N15	5706	O20	7625	C23		
3671	B27	3677	C27	3702	M6	3710	E16	3717	D5	3725	N14	3732	G6	3751	M13	6701	M14	7650	I29		
3672	I27	3678	C27	3703	A5	3711	B13	3719	C13	3726	N15	3733	L13	3752	E6	6702	M13	7650	C29		
3673	B27	3679	A29	3704	H5	3712	I13	3721	D13	3727	H13	3734	L13	5701	D6	6705	N14	7701	B9		
3674	I27	3681	G26	3705	B5	3713	B3	3722	F13	3729	A13	3739	C3	5702	A14	6706	M14	7701	L10		

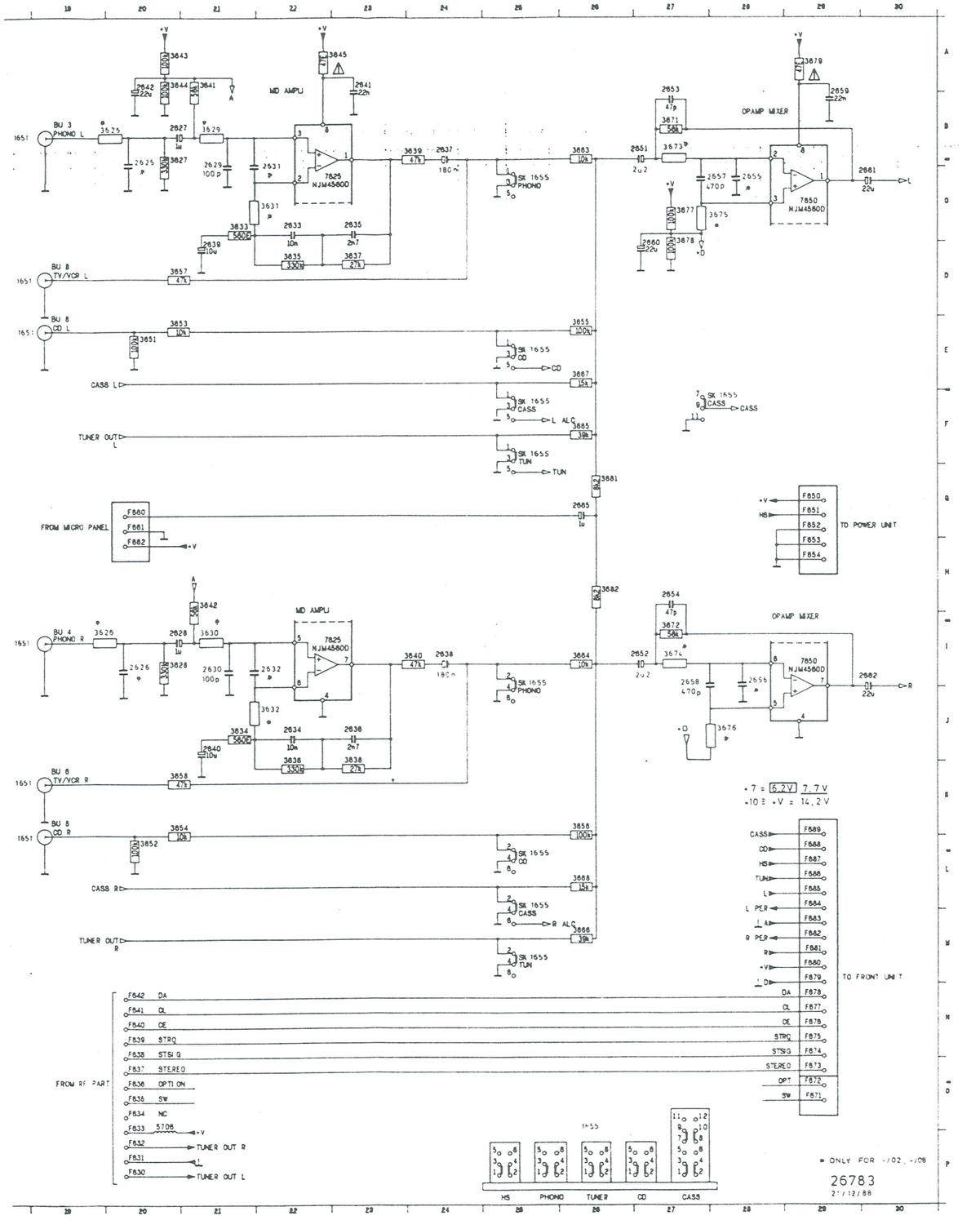

7402	7407	7411	7412	7413	7414	7415	7416	7417	7419
1-5.4V	e - 0.1V	e - 5.0V	e - 9.5V	e - 0V	e - 9.5V	e - 9.5V	e - 9.5V	e - 0 V	e - 5.0V
2-5.4V	b - 0.7V	b - 5.7V	b - 8.6V	b - 0.1V	b - 8.6V	b - 8.6V	b - 8.6V	b - 0.1V	b - 4.4V
3-5.4V	c - 0.1V	c - 9.9V	c - 12.0V	c - 8.6V	c - 0 V	c - 12.0V	c - 0 V	c - 8.6V	c - 4.9V
4- 0 V									
5-5.4V									
6-5.4V									
7-5.4V									
8-13.8V									

V ELECTRONIC VOLTMETER IMP. ≥ 1MΩ

V General

Measurement done with AC supply

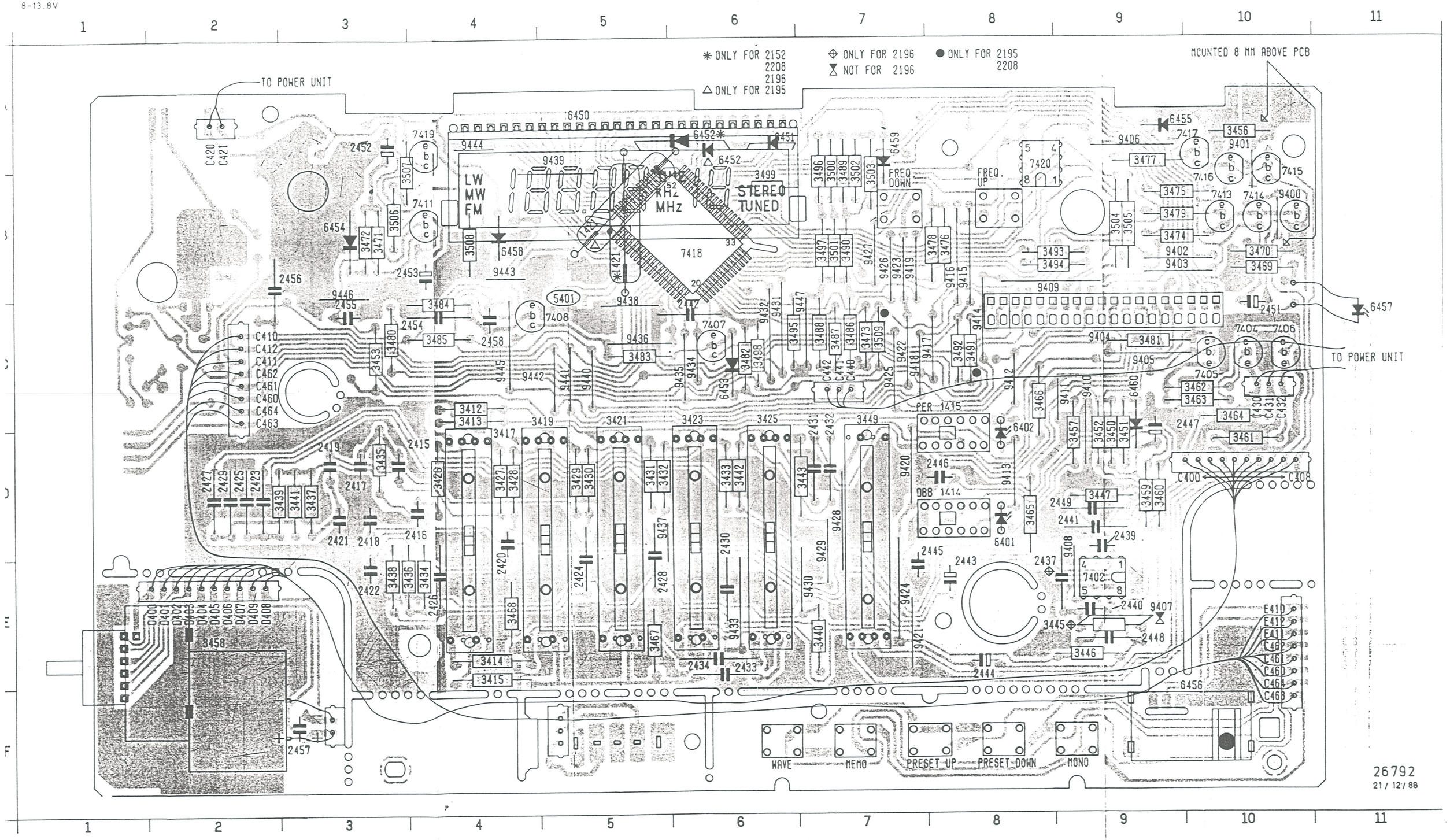

26792
21/12/88

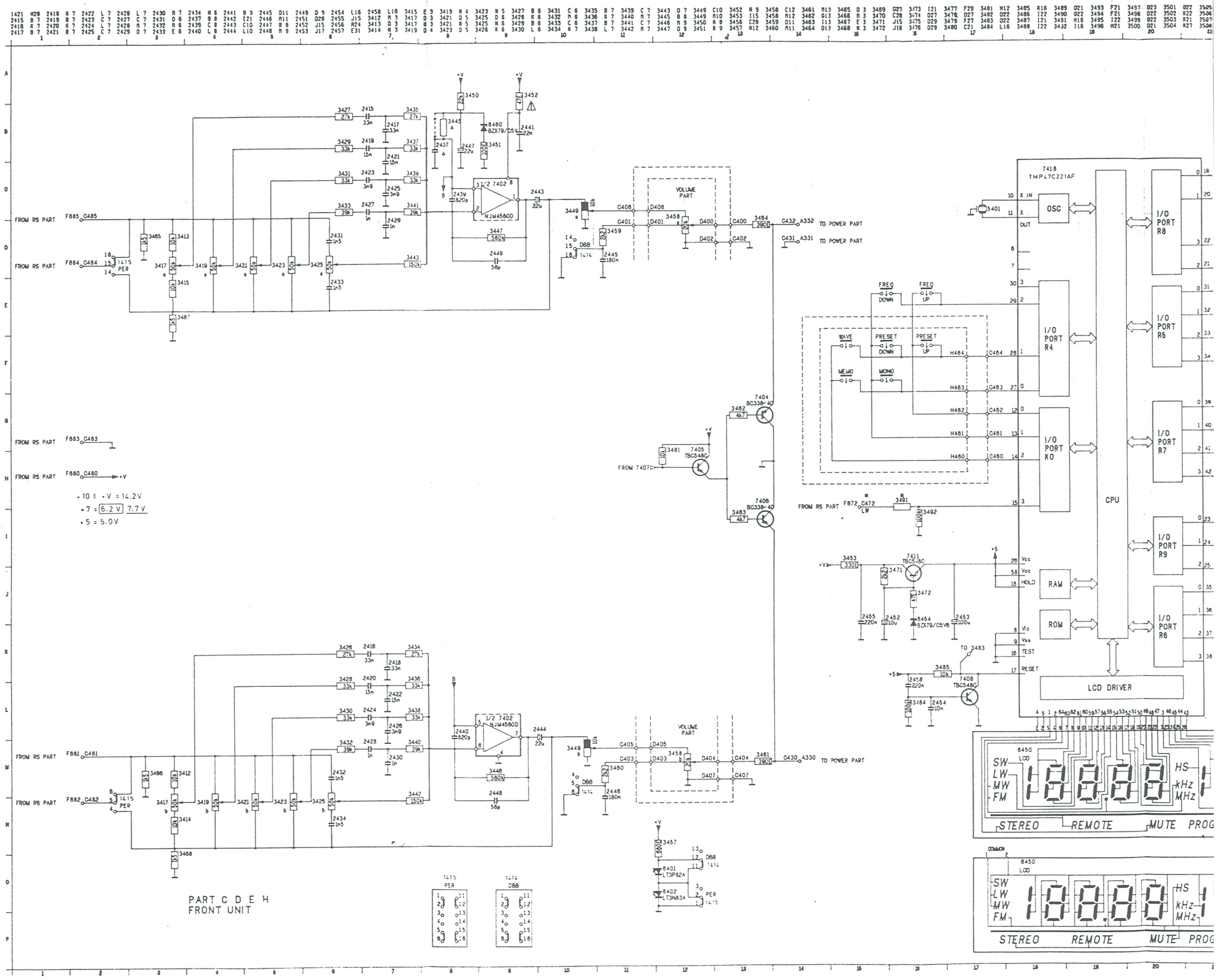

FROM RS PART
TO POWER PART
VOLUME PART
7418
TMP47C221AF
OSC
I/O PORT R8
I/O PORT R5
I/O PORT R4
I/O PORT R7
I/O PORT KO
I/O PORT R9
I/O PORT R6
CPU
RAM
ROM
LCD DRIVER
FREQ DOWN
FREQ UP
WAVE
PRESET DOWN
PRESET UP
MEMO
MONO
+10 ≡ +V = 14.2V
+7 = 6.2 V 7.7 V
+5 = 5.0V
PART C D E H
FRONT UNIT
STEREO
REMOTE
MUTE
PROG

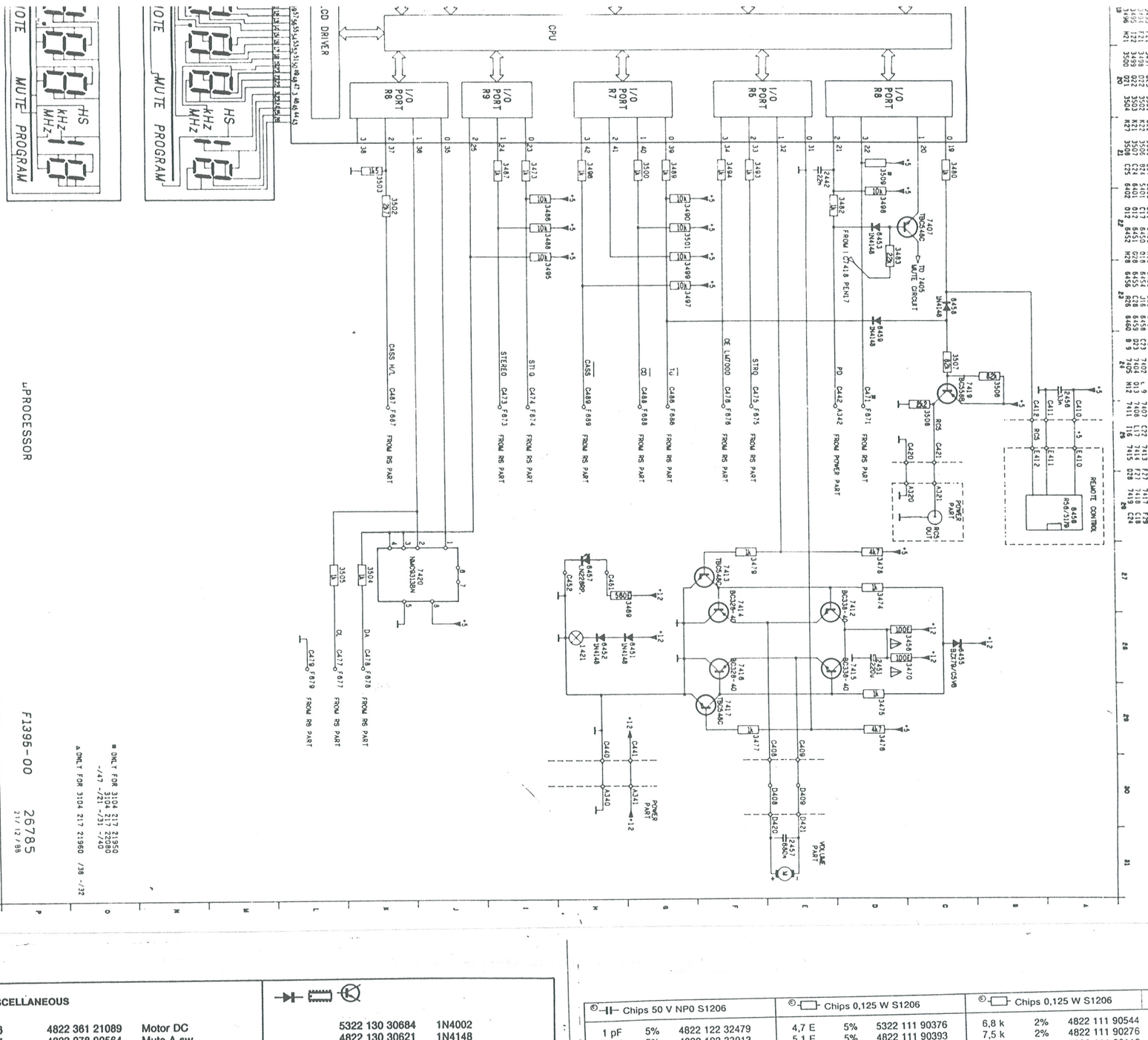

MISCELLANEOUS

1006	4822 361 21089	Motor DC
1007	4822 278 90564	Mute A sw
1008	4822 278 90564	Mute B sw
1009	4822 276 12165	Rec. sw
1010,1011	4822 249 10186	Rec./PB head
1012	4822 249 20072	Erase head
1111	4822 267 40668	Socket coaxial
1112	4822 276 12561	Grid sw (/31)
1113	4822 267 40668	Socket term
1300,1301	4822 253 10048	Fuse T3.15A ⚠
1302	4822 253 10046	Fuse T1.6A ⚠
1311	4822 265 20291	Socket mains ⚠
1316	4822 276 11567	Swich power
1317	4822 267 20371	Socket speaker
1319	4822 264 30175	Socket DC
1320	4822 272 10269	Volt sel (/31) ⚠
1325	4822 267 20372	Socket remote
1328	4822 264 30237	Socket mic.
1329	4822 264 30236	Socket headphone
1414	4822 276 12182	DBB switch
1415	4822 276 12182	HS dubbing
1421	4822 134 40965	Lamp 12V 150MA
1424,1425	4822 276 12465	Switch-key
1426,1427	4822 276 12465	Switch-key
1428,1429	4822 276 12465	Switch-key
1430	4822 276 12465	Switch-key
1651	4822 267 20373	Socket-assy
1652	4822 267 20374	Tag-phono gnd
1655	4822 276 12559	Switch-assy
1710	4822 276 12561	Switch-rif
	4822 218 10242	Remote control
	4822 240 80036	Loudspeaker box

	5322 130 30684	1N4002
	4822 130 30621	1N4148
	4822 130 60093	2SA838B
	4822 130 60163	2SC1047C
	4822 209 71321	AN7411
	5322 130 34955	BA482
	4822 130 81643	BB804
	5322 130 31684	BB809
	4822 130 41715	BC328-40
	5322 130 44779	BC338-40
	5322 130 42755	BC847C
	5322 130 42701	BD645
	5322 130 44786	BD675
	4822 130 44154	BF199
	4822 130 41024	BF245B
	4822 130 34197	BZX79C12V
	4822 130 34281	BZX79C15V
	4822 130 31981	BZX79C3V9
	4822 130 34174	BZX79C4V7
	4822 130 34173	BZX79C5V6
	4822 209 72744	CXA1240P
	4822 130 80305	KBU4D
	4822 130 90646	LCD
	4822 209 71331	LM7000
	4822 130 81358	LN228RP RD
	4822 209 83274	NJM4560D
	4822 209 60502	NMC9313BN
	4822 130 32227	OF642
	4822 218 30393	RCVR-Infrared
	4822 130 44196	TBC548C
	4822 130 44246	TBC549C
	4822 130 44197	TBC558B
	5322 130 60068	TBC558C
	4822 209 71743	TDA1520B/N1
	4822 209 61424	TDA1602B/N2
	4822 130 81229	TLG124A GN
	4822 130 31274	TLR124 RD
	4822 209 61344	TMP47C221AF

2103,2109	4822 125 60102	Trim N750 30P
2111,2153	4822 125 60102	Trim N750 30P
2205	4822 125 60102	Trim N750 30P
2134	4822 121 51263	PP A400V 510P
2135	4822 121 43253	PP A400V 360P
2151,2212	4822 125 60101	Trim N450 11P

3114,3145	4822 100 20166	Preset 10K
3313,3314	4822 111 30483	NFR25 1E ⚠
3321,3322	4822 116 81003	PR02 220E
3372	4822 111 30522	NFR25 33E ⚠
3417,3419	4822 105 11013	Potm. 50KB × 2
3421,3423	4822 105 11013	Potm. 50KB × 2
3425	4822 105 11013	Potm. 50KB × 2
3449	4822 101 30645	Potm. 10KmN × 2
3452,3645	4822 111 30526	NFR25 47E ⚠
3679	4822 111 30526	NFR25 47E ⚠
3456,3470	4822 116 81376	PR01 100E
3458	4822 102 10397	Potm. 20K × 2
3717	4822 111 30499	NFR25 4E7 ⚠

5001	4822 146 30756	Mains transfo. ⚠
5001-/31	4822 146 21443	Mains transfo. ⚠
5101,5102	4822 156 30947	FM RF
5103	4822 156 30947	FM RF
5104	4822 157 60284	FM RF (/31/40)
5104	4822 157 53199	FM osc. (/62/68)
5105	4822 156 10459	AM osc. (/62/68)
5105	4822 157 51844	AM osc. (/31/40)
5106,5205	4822 157 53192	Ind 0.22UH
5107	4822 242 72096	Cer. filter
5108	4822 158 60511	IFT AM blk
5109	4822 242 71878	Cer. filter
5110	4822 158 10855	FE bar (/31)
5110	4822 158 60585	FE bar (/40)
5110	4822 526 10424	FE bar (/62/68)
5111	4822 157 52734	IFT FM (/31/40)
5111	4822 157 60373	IFT AM (/62/68)
5112	4822 303 50034	Cristal 7.2MHz
5113	4822 157 53447	FE ind
5201,5202	4822 157 60316	SW osc. (/31)
5203	4822 157 53123	Ind 100UH
5204	4822 152 20699	Ind 560UH
5401	4822 242 72457	Resonator
5701	4822 156 20946	AM osc.
5702,5703	4822 156 20811	Coil 36MH
5706	4822 157 53123	Ind 100UH

Chips 50 V NP0 S1206

1 pF	5%	4822 122 32479
1,2 pF	5%	4822 122 33013
1,5 pF	5%	4822 122 31792
1,8 pF	5%	4822 122 32087
2,2 pF	5%	4822 122 32425
3,3 pF	5%	4822 122 32079
3,9 pF	5%	4822 122 32081
4,7 pF	5%	4822 122 32082
5,6 pF	5%	4822 122 32506
6,8 pF	5%	4822 122 32507
8,2 pF	5%	4822 122 32083
10 pF	5%	4822 122 31971
12 pF	5%	4822 122 32139
15 pF	5%	4822 122 32504
18 pF	5%	4822 122 31769
22 pF	10%	4822 122 31837
27 pF	5%	4822 122 31966
33 pF	5%	4822 122 31756
39 pF	5%	4822 122 31972
47 pF	5%	4822 122 31772
56 pF	5%	4822 122 31774
68 pF	5%	4822 122 31961
82 pF	10%	4822 122 31839
100 pF	5%	4822 122 31765
120 pF	5%	4822 122 31766
150 pF	5%	4822 122 31767
180 pF	2%	4822 122 31794
220 pF	5%	4822 122 31965
270 pF	5%	4822 122 32142
330 pF	10%	4822 122 31642
390 pF	5%	4822 122 31771
470 pF	5%	4822 122 31727
560 pF	5%	4822 122 31773
680 pF	5%	4822 122 31775
820 pF	5%	4822 122 31974
1 nF	10%	5322 122 31647
1,2 nF	5%	4822 122 31807
1,5 nF	10%	4822 122 31781
1,8 nF	10%	4822 122 32153
2,2 nF	10%	4822 122 31644
2,7 nF	10%	4822 122 31783
3,3 nF	10%	4822 122 31969
3,9 nF	10%	4822 122 32566
4,7 nF	10%	4822 122 31784
5,6 nF	10%	4822 122 31916
6,8 nF	10%	4822 122 31976
10 nF	10%	4822 122 31728
12 nF	10%	5322 122 31648
15 nF	10%	4822 122 31782
18 nF	10%	4822 122 31759
22 nF	10%	4822 122 31797
27 nF	10%	4822 122 32541
33 nF	10%	4822 122 31981
47 nF	10%	4822 122 32542
56 nF	10%	4822 122 32183
100 nF	10%	4822 122 31947
180 nF	10%	4822 122 32915
220 nF	20%	4822 122 32715

Chips 0,125 W S1206 NP0

0 E	jumper	4822 111 90163
1 E	5%	4822 111 90184
1,1 E	5%	4822 111 90377
1,2 E	5%	4822 111 90378
1,3 E	5%	4822 111 90379
1,5 E	5%	4822 111 90381
1,6 E	5%	4822 111 90382
1,8 E	5%	4822 111 90383
2 E	5%	4822 111 90384
2,2 E	5%	5322 111 90104
2,4 E	5%	4822 111 90385
2,7 E	5%	4822 111 90386
3 E	5%	4822 111 90387
3,3 E	5%	4822 111 90388
3,6 E	5%	4822 111 90389
3,9 E	5%	4822 111 90391
4,3 E	5%	4822 111 90392

Chips 0,125 W S1206

4,7 E	5%	5322 111 90376
5,1 E	5%	4822 111 90393
5,6 E	5%	4822 111 90394
6,2 E	5%	4822 111 90395
6,8 E	5%	4822 111 90254
7,5 E	5%	4822 111 90396
8,2 E	5%	4822 111 90397
9,1 E	5%	4822 111 90398
10 E	2%	5322 111 90095
11 E	2%	4822 111 90338
12 E	2%	4822 111 90341
13 E	2%	4822 111 90343
15 E	2%	4822 111 90344
16 E	2%	4822 111 90347
18 E	2%	5322 111 90139
20 E	2%	4822 111 90352
22 E	2%	4822 111 90186
24 E	2%	4822 111 90355
27 E	2%	5322 111 90105
30 E	2%	4822 111 90356
33 E	2%	4822 111 90357
36 E	2%	4822 111 90359
39 E	2%	4822 111 90361
43 E	2%	5322 116 90125
47 E	2%	4822 111 90217
51 E	2%	4822 111 90365
56 E	2%	4822 111 90239
62 E	2%	4822 111 90367
68 E	2%	4822 111 90203
75 E	2%	4822 111 90371
82 E	2%	4822 111 90124
91 E	2%	4822 111 90375
100 E	2%	5322 111 90091
110 E	2%	4822 111 90335
120 E	2%	4822 111 90339
130 E	2%	4822 111 90164
150 E	2%	5322 111 90098
160 E	2%	4822 111 90345
180 E	2%	5322 111 90242
200 E	2%	4822 111 90348
220 E	2%	4822 111 90178
240 E	2%	4822 111 90353
270 E	2%	4822 111 90154
300 E	2%	4822 111 90156
330 E	2%	5322 111 90106
360 E	1%	4822 111 90288
360 E	2%	4822 111 90358
390 E	2%	5322 111 90138
430 E	2%	4822 111 90362
470 E	2%	5322 111 90109
510 E	2%	4822 111 90245
560 E	2%	5322 111 90113
620 E	2%	4822 111 90366
680 E	2%	4822 111 90162
750 E	2%	5322 111 90306
820 E	2%	4822 111 90171
910 E	2%	4822 111 90372
1 k	2%	5322 111 90092
1,1 k	2%	4822 111 90336
1,2 k	2%	5322 111 90096
1,3 k	2%	4822 111 90244
1,5 k	2%	4822 111 90151
1,6 k	2%	5322 111 90265
1,8 k	2%	5322 111 90101
2 k	2%	4822 111 90165
2,2 k	2%	4822 111 90248
2,4 k	2%	4822 111 90289
2,7 k	2%	4822 111 90569
3 k	2%	4822 111 90198
3,3 k	2%	4822 111 90157
3,6 k	2%	5322 111 90107
3,9 k	2%	4822 111 90571
4,3 k	2%	4822 111 90167
4,7 k	2%	5322 111 90111
5,1 k	2%	5322 111 90268
5,6 k	2%	4822 111 90572
6,2 k	2%	4822 111 90545

Chips 0,125 W S1206 1U

6,8 k	2%	4822 111 90544
7,5 k	2%	4822 111 90276
8,2 k	2%	5322 111 90118
9,1 k	2%	4822 111 90373
10 k	2%	4822 111 90249
11 k	2%	4822 111 90337
12 k	2%	4822 111 90253
13 k	2%	4822 111 90509
15 k	2%	4822 111 90196
16 k	2%	4822 111 90346
18 k	2%	4822 111 90238
20 k	2%	4822 111 90349
22 k	2%	4822 111 90251
24 k	2%	4822 111 90512
27 k	2%	4822 111 90542
30 k	2%	4822 111 90216
33 k	2%	5322 111 90267
36 k	2%	4822 111 90514
39 k	2%	5322 111 90108
43 k	2%	4822 111 90363
47 k	2%	4822 111 90543
51 k	2%	5322 111 90274
56 k	2%	4822 111 90573
62 k	2%	5322 111 90275
68 k	2%	4822 111 90202
75 k	2%	4822 111 90574
82 k	2%	4822 111 90575
91 k	2%	5322 111 90277
100 k	2%	4822 111 90214
110 k	2%	5322 111 90269
120 k	2%	4822 111 90568
130 k	2%	4822 111 90511
150 k	2%	5322 111 90099
160 k	2%	5322 111 90264
180 k	2%	4822 111 90565
200 k	2%	4822 111 90351
220 k	2%	4822 111 90197
240 k	2%	4822 111 90215
270 k	2%	4822 111 90302
300 k	2%	5322 111 90266
330 k	2%	4822 111 90513
360 k	2%	4822 111 90515
390 k	2%	4822 111 90182
430 k	2%	4822 111 90168
470 k	2%	4822 111 90161
510 k	2%	4822 111 90364
560 k	2%	4822 111 90169
620 k	2%	4822 111 90213
680 k	2%	4822 111 90368
750 k	2%	4822 111 90369
820 k	2%	4822 111 90205
910 k	2%	4822 111 90374
1 M	2%	4822 111 90252
1,1 M	5%	4822 111 90408
1,2 M	5%	4822 111 90409
1,3 M	5%	4822 111 90411
1,5 M	5%	4822 111 90412
1,6 M	5%	4822 111 90413
1,8 M	5%	4822 111 90414
2 M	5%	4822 111 90415
2,2 M	5%	4822 111 90185
2,4 M	5%	4822 111 90416
2,7 M	5%	4822 111 90417
3 M	5%	4822 111 90418
3,3 M	5%	4822 111 90191
3,6 M	5%	4822 111 90419
3,9 M	5%	4822 111 90421
4,3 M	5%	4822 111 90422
4,7 M	5%	4822 111 90423
5,1 M	5%	4822 111 90424
5,6 M	5%	4822 111 90425
6,2 M	5%	4822 111 90426
6,8 M	5%	4822 111 90235
7,5 M	5%	4822 111 90427
8,2 M	5%	4822 111 90237
9,1 M	5%	4822 111 90428
10M	5%	5322 111 91141